BRITISH STANDARD

BS EN 55014-1:2006 +A1:2009

Incorporating corrigendum January 2009

Electromagnetic compatibility — Requirements for household appliances, electric tools and similar apparatus —

Part 1: Emission

ICS 33.100.10

British Standards

National foreword

This British Standard is the UK implementation of EN 55014-1:2006 +A1:2009. It is identical with CISPR 14-1:2005 incorporating amendment 1:2008 and corrigendum January 2009. It supersedes BS EN 55014-1:2006, which will be withdrawn on 1 May 2012.

The start and finish of text introduced or altered by amendment is indicated in the text by tags. Tags indicating changes to CISPR text carry the number of the CISPR amendment. For example, text altered by CISPR amendment A1 is indicated by ▌A1〉 〈A1▌.

The UK participation in its preparation was entrusted by Technical Committee GEL/210, EMC — Policy committee, to Subcommittee GEL/210/11, EMC product standards.

A list of organizations represented on this subcommittee can be obtained on request to its secretary.

This publication does not purport to include all the necessary provisions of a contract. Users are responsible for its correct application.

Compliance with a British Standard cannot confer immunity from legal obligations.

Amendments/corrigenda issued since publication

Date	Comments
31 July 2009	Implementation of IEC corrigendum January 2009. Text modified in the second paragraph of **7.3.1.16.2**
31 August 2009	Implementation of CISPR amendment 1:2008 with CENELEC endorsement A1:2009

This British Standard was published under the authority of the Standards Policy and Strategy Committee on 31 January 2007

ISBN 978 0 580 68898 0

EUROPEAN STANDARD

NORME EUROPÉENNE

EUROPÄISCHE NORM

EN 55014-1:2006+A1

May 2009

ICS 33.100.10

Supersedes EN 55014-1:2006

English version

Electromagnetic compatibility - Requirements for household appliances, electric tools and similar apparatus Part 1: Emission

(CISPR 14-1:2005)

Compatibilité électromagnétique - Exigences pour les appareils électrodomestiques, outillages électriques et appareils analogues Partie 1: Emission (CISPR 14-1:2005)

Elektromagnetische Verträglichkeit - Anforderungen an Haushaltgeräte, Elektrowerkzeuge und ähnliche Elektrogeräte Teil 1: Störaussendung (CISPR 14-1:2005)

This European Standard was approved by CENELEC on 2006-09-12. CENELEC members are bound to comply with the CEN/CENELEC Internal Regulations which stipulate the conditions for giving this European Standard the status of a national standard without any alteration.

Up-to-date lists and bibliographical references concerning such national standards may be obtained on application to the Central Secretariat or to any CENELEC member.

This European Standard exists in three official versions (English, French, German). A version in any other language made by translation under the responsibility of a CENELEC member into its own language and notified to the Central Secretariat has the same status as the official versions.

CENELEC members are the national electrotechnical committees of Austria, Belgium, Cyprus, the Czech Republic, Denmark, Estonia, Finland, France, Germany, Greece, Hungary, Iceland, Ireland, Italy, Latvia, Lithuania, Luxembourg, Malta, the Netherlands, Norway, Poland, Portugal, Romania, Slovakia, Slovenia, Spain, Sweden, Switzerland and the United Kingdom.

CENELEC

European Committee for Electrotechnical Standardization
Comité Européen de Normalisation Electrotechnique
Europäisches Komitee für Elektrotechnische Normung

Central Secretariat: rue de Stassart 35, B - 1050 Brussels

Ref. No. EN 55014-1:2006 E

Foreword

The text of document CISPR/F/404/FDIS, future edition 5 of CISPR 14-1, prepared by CISPR SC F, Interference relating to household appliances, tools, lighting equipment and similar apparatus, was submitted to the IEC-CENELEC parallel vote and was approved by CENELEC as EN 55014-1 on 2006-09-12.

This European Standard supersedes EN 55014-1:2000 + A1:2001 + A2:2002.

The following dates were fixed:

– latest date by which the EN has to be implemented at national level by publication of an identical national standard or by endorsement	(dop)	2007-06-01
– latest date by which the national standards conflicting with the EN have to be withdrawn	(dow)	2009-09-01

This European Standard has been prepared under a mandate given to CENELEC by the European Commission and the European Free Trade Association and covers essential requirements of EC Directives 89/336/EEC and 2004/108/EC. See Annex ZZ.

Annexes ZA and ZZ have been added by CENELEC.

Endorsement notice

The text of the International Standard CISPR 14-1:2005 was approved by CENELEC as a European Standard without any modification.

Foreword to amendment A1

The text of document CISPR/F/491/FDIS, future amendment 1 to CISPR 14-1:2005, prepared by CISPR SC F, Interference relating to household appliances, tools, lighting equipment and similar apparatus, was submitted to the IEC-CENELEC parallel vote and was approved by CENELEC as amendment A1 to EN 55014-1:2006 on 2009-04-22.

The following dates were fixed:

– latest date by which the amendment has to be implemented at national level by publication of an identical national standard or by endorsement	(dop)	2010-02-01
– latest date by which the national standards conflicting with the amendment have to be withdrawn	(dow)	2012-05-01

Annex ZA has been added by CENELEC.

Endorsement notice

The text of amendment 1:2008 to the International Standard CISPR 14-1:2005 was approved by CENELEC as an amendment to the European Standard without any modification.

CONTENTS

INTRODUCTION 5

1 Scope 6
2 Normative references 7
3 Definitions 8
4 Limits of disturbance 11
4.1 Continuous disturbance 11
4.2 Discontinuous disturbance 16
5 Methods of measurement of terminal disturbance voltages (148,5 kHz to 30 MHz) 19
5.1 Measuring devices 19
5.2 Measuring procedures and arrangements 20
5.3 Reduction of disturbance not produced by the equipment under test 24
6 Methods of measurement of disturbance power (30 MHz to 300 MHz) 25
6.1 Measuring devices 25
6.2 Measurement procedure on the mains lead 25
6.3 Special requirements for appliances having auxiliary apparatus connected at the end of a lead other than the mains lead 26
6.4 Assessment of measuring results 27
7 Operating conditions and interpretation of results 27
7.1 General 27
7.2 Operating conditions for particular equipment and integrated parts 28
7.3 Standard operating conditions and normal loads 31
7.4 Interpretation of results 48
8 Interpretation of CISPR radio disturbance limit 51
8.1 Significance of a CISPR limit 51
8.2 Type tests 51
8.3 Compliance with limits for appliances in large-scale production 52
8.4 Non-compliance 54
9 Methods of measurement of radiated emission (30 MHz to 1 000 MHz) 55
10 Measurement uncertainty 55

Annex A (normative) Limits of disturbance caused by the switching operations of specific appliances when the formula 20 lg 30/*N* is applicable 69
Annex B (informative) Example of the use of the upper quartile method to determine compliance with disturbance limits (see 7.4.2.6) 72
Annex C (informative) Guidance notes for the measurement of discontinuous disturbance (clicks) 74
Annex ZA (normative) Normative references to international publications with their corresponding European publications 80
Annex ZZ (informative) Coverage of Essential Requirements of EC Directives 82

Bibliography 79

Figure 1 – Graphical representation of the limits, household appliances and electric tools (see 4.1.1) 56

Figure 2 – Graphical representation of the limits, regulating controls (see 4.1.1) 57

Figure 3 – Examples of discontinuous disturbances classified as clicks (see 3.2) 58

Figure 4 – Examples of discontinuous disturbance for which the limits of continuous disturbance apply (see 4.2.2.1). For some exceptions from this rule see 4.2.3.2 and 4.2.3.4 59

Figure 5 – Measuring arrangement for regulating controls (see 5.2.4) 60

Figure 6 – Arrangement for measurement of disturbance voltage produced at the fence terminal of electric fence energizers (see 7.3.7.2) 62

Figure 7 – Measuring arrangement for toys running on tracks 63

Figure 8 – Application of the artificial hand (5.1.4 and 5.2.2.2) 65

Figure 9 – Flow diagram for measurements of discontinuous disturbance (see Annex C) 66

Figure 10 – Flow chart for emission testing of mains operated appliances in the frequency range from 30 MHz to 1 000 MHz 67

Figure 11 – Flow chart for emission testing of battery-operated appliances in the frequency range from 30 MHz to 1 000 MHz 68

Table 1 – Terminal voltage limits for the frequency range 148,5 kHz to 30 MHz (see Figures 1 and 2) 13

Table 2 – Disturbance power limits for the frequency range 30 MHz to 300 MHz 14

Table 3 – Radiated disturbance limits for toys for the frequency range 30 MHz to 1 000 MHz at 10 m distance from the source 15

Table 4 – General margin to the limit for statistical evaluation 52

Table 5 – Factor *k* for the application of the non-central *t*-distribution 53

Table 6 – Application of the binomial distribution 54

Table A.1 – Examples of appliances and application of limits according to 4.2.2 and 4.2.3 for which the click rate *N* is derived from the number of clicks 70

Table A.2 – Examples of appliances and application of limits for which the click rate *N* is derived from the number of switching operations and the factor *f* as mentioned in the relevant operating conditions 71

INTRODUCTION

The intention of this standard is to establish uniform requirements for the radio disturbance level of the equipment contained in the scope, to fix limits of disturbance, to describe methods of measurement and to standardize operating conditions and interpretation of results.

ELECTROMAGNETIC COMPATIBILITY – REQUIREMENTS FOR HOUSEHOLD APPLIANCES, ELECTRIC TOOLS AND SIMILAR APPARATUS –

Part 1: Emission

1 Scope

1.1 This standard applies to the conduction and the radiation of radio-frequency disturbances from appliances whose main functions are performed by motors and switching or regulating devices, unless the r.f. energy is intentionally generated or intended for illumination.

It includes such equipment as: household electrical appliances, electric tools, regulating controls using semiconductor devices, motor-driven electro-medical apparatus, electric/ electronic toys, automatic dispensing machines as well as cine or slide projectors. ⟨A1⟩ Both mains powered appliances and battery powered appliances are included. ⟨A1⟩

Also included in the scope of this standard are:

– separate parts of the above mentioned equipment such as motors, switching devices e.g. (power or protective) relays, however no emission requirements apply unless formulated in this standard.

Excluded from the scope of this standard are:

– apparatus for which all emission requirements in the radio frequency range are explicitly formulated in other IEC or CISPR standards;

NOTE 1 Examples are:

- luminaires, including portable luminaires for children, discharge lamps and other lighting devices: CISPR 15;
- audio and video equipment and electronic music instruments, other than toys: CISPR 13 and CISPR 20 (see also 7.3.5.4.2);
- mains communication devices, as well as baby surveillance systems: IEC 61000-3-8;
- equipment for generation and use of radio frequency energy for heating and therapeutic purposes: CISPR 11;
- microwave ovens: CISPR 11 (but be aware of 1.3 on multifunction equipment);
- information technology equipment, e.g. home computers, personal computers, electronic copying machines: CISPR 22;
- electronic equipment to be used on motor vehicles: CISPR 12;
- radio controls, walkie-talkies and other types of radio-transmitters, also when used with toys.
- ⟨A1⟩ – arc welding equipment: CISPR 11. ⟨A1⟩

– regulating controls and equipment with regulating controls incorporating semiconductor devices with a rated input current of more than 25 A per phase;

– stand-alone power supplies.

NOTE 2 Toys powered by the supply system of a motor-powered vehicle, ship or aircraft are not covered by this standard.

1.2 The frequency range covered is 9 kHz to 400 GHz.

1.3 Multifunction equipment which is subjected simultaneously to different clauses of this standard and/or other standards shall meet the provisions of each clause/standard with the relevant functions in operation; details are given in 7.2.1.

1.4 The limits in this standard have been determined on a probabilistic basis, to keep the suppression of disturbances economically feasible while still achieving an adequate radio protection. In exceptional cases radio frequency interference may occur, in spite of compliance with the limits. In such a case, additional provisions may be required.

1.5 The effects of electromagnetic phenomena relating to the safety of apparatus are excluded from the scope of this standard.

2 Normative references

The following referenced documents are indispensable for the application of this document. For dated references, only the edition cited applies. For undated references, the latest edition of the referenced document (including any amendments) applies.

IEC 60050-161:1990, *International Electrotechnical Vocabulary – Chapter 161: Electromagnetic compatibility*
Amendment 1: 1997
Amendment 2: 1998

IEC 60335-2-76:2002, *Household and similar electrical appliances – Safety – Part 2-76: Particular requirements for electric fence energizers.*

IEC 60598-2-4:1997, *Luminaires – Part 2-4: Particular requirements – Section 4 : Portable general purpose luminaires*

IEC 60598-2-10:2003, *Luminaires – Part 2-10: Particular requirements – Portable luminaires for children.*

[A1] IEC 61000-4-20:2003, *Electromagnetic compatibility (EMC) – Part 4-20: Testing and measurement techniques – Emission and immunity testing in transverse electromagnetic (TEM) waveguides* [A1]

CISPR 15:2000, *Limits and methods of measurement of radio disturbance characteristics electrical lighting and similar equipment.*

CISPR 16-1-1:2003*, Specification for radio disturbance and immunity measuring apparatus and methods – Part 1-1: Radio disturbance and immunity measuring apparatus – Measuring apparatus*

CISPR 16-1-2:2003, *Specification for radio disturbance and immunity measuring apparatus and methods – Part 1-2: Radio disturbance and immunity measuring apparatus – Ancillary equipment – Conducted disturbances*

CISPR 16-1-3:2004, *Specification for radio disturbance and immunity measuring apparatus and methods – Part 1-3: Radio disturbance and immunity measuring apparatus – Ancillary equipment – Disturbance power*

CISPR 16-2-1:2003, *Specification for radio disturbance and immunity measuring apparatus and methods – Part 2-1: Methods of measurement of disturbances and immunity – Conducted disturbance measurements*

CISPR 16-2-2:2003, *Specification for radio disturbance and immunity measuring apparatus and methods – Part 2-2: Methods of measurement of disturbances and immunity – Measurement of disturbance power*

CISPR 22:2005, *Information technology equipment – Radio disturbance characteristics – Limits and methods of measurement*

A1 CISPR 16-1-4:2007, *Specification for radio disturbance and immunity measuring apparatus and methods – Part 1-4: Radio disturbance and immunity measuring apparatus – Ancillary equipment – Radiated disturbances*
Amendment 1 (2007)

CISPR 16-2-3:2006, *Specification for radio disturbance and immunity measuring apparatus and methods – Part 2-3: Methods of measurement of disturbances and immunity – Radiated disturbance measurements*

CISPR 16-4-2:2003, *Specification for radio disturbance and immunity measuring apparatus and methods – Part 4-2: Uncertainties, statistics and limit modelling – Uncertainty in EMC measurements* A1

3 Definitions

For the purpose of this standard, the definitions contained in IEC 60050-161 apply extended with the specific definitions as follows:

3.1 Definitions of the following terms are specified in CISPR 16-2-1 or CISPR 16-2-2:

Reference ground

Equipment under test (EUT)

Level

Weighting

3.2
click
a disturbance, the amplitude of which exceeds the quasi-peak limit of continuous disturbance, the duration of which is not longer than 200 ms and which is separated from a subsequent disturbance by at least 200 ms. The durations are determined from the signal which exceeds the i.f. reference level of the measuring receiver

A click may contain a number of impulses; in which case the relevant time is that from the beginning of the first to the end of the last impulse.

NOTE Under certain conditions, some kinds of disturbances are exempted from this definition (see 4.2.3)

3.3
i.f. reference level
the corresponding value on the intermediate frequency output of the measuring receiver of an unmodulated sinusoidal signal which produces a quasi-peak indication equal to the limit for continuous disturbance

3.4
switching operation
one opening or one closing of a switch or contact

NOTE Independent of whether clicks are observed or not.

3.5
minimum observation time
T
the minimum time necessary when counting clicks (or where relevant counting switching operations) to provide sufficiently firm evidence for the statistical interpretation of the number of clicks (or switching operations) per time unit (see also 7.4.2.1)

3.6
click rate
N
in general the number of clicks or switching operations within one minute; this Figure is being used to determine the click limit (see also 7.4.2.3)

3.7
click limit
L_q
the relevant limit L for continuous disturbance, as given in 4.1.1 for the measurement with the quasi-peak detector, increased by a certain value determined from the click rate N (see also 4.2.2.2)

The click limit applies to the disturbance assessed according to the upper quartile method.

3.8
upper quartile method
a quarter of the number of the clicks registered during the observation time T is allowed to exceed the click limit L_q

In the case of switching operations a quarter of the number of the switching operations registered during the observation time is allowed to produce clicks exceeding the click limit L_q (see also 7.4.2.6).

3.9
toy
product designed for, or clearly intended for use in play by children under 14 years old.

Toys may incorporate motors, heating elements, electronic circuits and their combination.

The supply voltage of a toy shall not exceed 24 V a.c. (r.m.s) or ripple-free d.c. and may be provided by a battery or by means of an adapter or a safety transformer connected to the mains supply

NOTE Transformers, converters and chargers for toys are considered not to be part of the toy (see IEC 61558-2-7).

3.10
battery toy
toy which contains or uses one or more batteries as the only source of electrical energy

3.11
transformer toy
toy which is connected to the supply mains through a transformer for toys and using the supply mains as the only source of electrical energy

3.12
dual supply toy
toy which can be operated simultaneously or alternatively as a battery toy and a transformer toy

3.13
battery box
compartment which is separate from the toy ⟦A1⟩ or appliance and in which the batteries are placed ⟨A1⟧

3.14
safety isolating transformer
transformer, the input winding of which is electrically separated from the output winding by an insulation at least equivalent to double insulation or reinforced insulation, and which is designed to supply an appliance or circuit at safety extra-low voltage

3.15
safety transformer for toys
safety isolating transformer specially designed to supply toys operating at safety extra-low voltage not exceeding 24 V

NOTE Either a.c. or d.c. or both may be delivered from the transformer unit.

3.16
constructional kit
collection of electric, electronic or mechanical parts intended to be assembled as various toys

3.17
experimental kit
collection of electric or electronic components intended to be assembled in various combinations

NOTE The main aim of an experimental set is to facilitate the acquiring of knowledge by experiment and research. It is not intended to create a toy or equipment for practical use.

3.18
functional toy
toy with a rated voltage not exceeding 24 V and which is a model of an appliance or installation used by adults

NOTE A product with a rated voltage exceeding 24 V, intended to be used by children under the direct supervision of an adult and which is a model of an appliance or installation and used in the same way, is known as a functional product.

3.19
portable luminaire for children
luminaire that in normal use can be moved from one place to another while connected to the supply and which is designed to provide a level of safety in excess of that provided by a portable general purpose luminaire conforming with IEC 60598-2-4

NOTE A portable luminaire for children is intended for use by children who may not be under the supervision of more competent persons at the time of use.

[IEC 60598-2-10: 10.3.1]

3.20
video toy
toy consisting of a screen and activating means by which the child can play and interact with the picture shown on the screen

NOTE All parts necessary for the operation of the video toy, such as control box, joy stick, keyboard, monitor and connections, are considered to be part of the toy.

3.21
electronic circuit
circuit incorporating at least one electronic component

3.22
electronic component
part in which conduction is achieved principally by electrons moving through a vacuum, gas or semiconductor

NOTE Electronic components do not include resistors, capacitors and inductors.

3.23
normal operation of toys
condition under which the toy, connected to the recommended power supply, is played with as intended or in a foreseeable way, bearing in mind the normal behaviour of children

A1 **3.24**
clock frequency
the fundamental frequency of any signal used in the device excluding those which are solely used inside integrated circuits (IC)

NOTE High frequencies are often generated inside of integrated circuits (IC) by phase-locked-loop (PLL) circuits from lower clock oscillator frequencies outside the IC.

3.25
battery-operated appliance
appliance which is operated only from batteries and has no provision for performing its intended function when connected to the mains, either directly or via a power supply

NOTE 1 Toys are not considered to be appliances.

NOTE 2 An appliance which has provision for charging but cannot perform its intended function during charging is considered to be a battery-operated appliance.

3.26
mains-operated appliance
all appliances which are not battery-operated appliances

NOTE Toys are not considered to be appliances. A1

4 Limits of disturbance

Radio disturbance measurements below 148,5 kHz and above A1 1 000 MHz do not need to be be carried out. A1

4.1 Continuous disturbance

Commutator motors, as well as other devices incorporated in household appliances, electric tools and similar electrical apparatus may cause continuous disturbance.

Continuous disturbance may be either broadband, caused by switching devices such as mechanical switches, commutators and semiconductor regulators, or may be narrowband, caused by electronic control devices such as microprocessors.

NOTE Instead of the concept of "broadband" and "narrowband" disturbances, in this standard a distinction is made between two related kinds of disturbance, defined by the type of the applied detector. For this purpose limits have been defined with respect to the measurement with the quasi-peak detector and with the average detector (see 5.1.1 and 6.1.1).

4.1.1 Frequency range 148,5 kHz to 30 MHz (terminal voltages)

NOTE The World Administrative Radiocommunications Conference (WARC) has in 1979 reduced the lower frequency limit in Region 1 to 148,5 kHz; for applications falling in the scope of this standard, tests at 150 kHz are considered adequate, since 148,5 kHz falls within the receiver bandwidth.

The limits of the terminal disturbance voltages are given in Table 1. Terminal voltages are measured, in accordance with Clause 5, on each terminal with respect to ground.

Terminals are defined as conductive parts, suitable for re-usable electrical connection to external circuits.

4.1.1.1 The limits in columns 2 and 3 shall be met on the phase(s) and the neutral of the mains terminals of all appliances except those of electric tools.

4.1.1.2 On additional terminals of appliances as well as on load and additional terminals of regulating controls incorporating semiconductor devices the relaxed limits given for "additional terminals" in columns 4 and 5 apply.

Terminals which may be used as either mains terminals or load/additional terminals are subject to the limits for mains terminals.

No terminal voltage limits apply for leads, which are not easily extensible by the user (permanently connected, or provided with a specific connector), which are shorter than 2 m, and which connect the equipment with an auxiliary apparatus or device, (e.g. semiconductor speed controls, power plugs with AC-DC converters).

No terminal voltage limits apply to leads integrated in the suction hose of vacuum cleaners, even if the length exceeds 2 m.

NOTE For the measurement at the load terminals and additional terminals of regulating controls incorporating semiconductor devices see 5.2.4, for additional terminals of other appliances see 5.2.3.

4.1.1.3 For the mains terminals of electric tools the particular limits given in columns 6 to 11 apply according to the rated power of the motor, the power of any heating device is to be excluded (for instance heating power in a blower for plastic welding). For the load terminals and additional terminals of electric tools, columns 4 and 5 apply without further relaxation.

Table 1 – Terminal voltage limits for the frequency range 148,5 kHz to 30 MHz
(see Figures 1 and 2)

HOUSEHOLD APPLIANCES AND EQUIPMENT CAUSING SIMILAR DISTURBANCES AND REGULATING CONTROLS INCORPORATING SEMICONDUCTOR DEVICES

Frequency range	**At mains terminals**		**At load terminals and additional terminals**	
1	**2**	**3**	**4**	**5**
(MHz)	dB (µV) Quasi-peak	dB (µV) Average*	dB (µV) Quasi-peak	dB (µV) Average*
0,15 to 0,50	Decreasing linearly with the logarithm of the frequency from:		80	70
	66 to 56	59 to 46		
0,50 to 5	56	46	74	64
5 to 30	60	50	74	64

MAINS TERMINALS OF TOOLS

1	**6**	**7**	**8**	**9**	**10**	**11**
Frequency range	**Rated motor power not exceeding 700 W**		**Rated motor power above 700 W and not exceeding 1 000 W**		**Rated motor power above 1 000 W**	
(MHz)	dB (µV) Quasi-peak	dB (µV) Average*	dB (µV) Quasi-peak	dB (µV) Average*	dB (µV) Quasi-peak	dB (µV) Average*
0,15 to 0,35	Decreasing linearly with the logarithm of the frequency from:					
	66 to 59	59 to 49	70 to 63	63 to 53	76 to 69	69 to 59
0,35 to 5	59	49	63	53	69	59
5 to 30	64	54	68	58	74	64
* If the limit for the measurement with the average detector is met when using a receiver with a quasi-peak detector, the equipment under test shall be deemed to meet both limits and the measurement using the receiver with an average detector need not be carried out.						

NOTE The limits for the measurement with the average detector are tentative and may be modified after a period of experience.

4.1.1.4 Limits for electric fence energizers apply to

a) the fence terminals on all energizers (columns 4 and 5 of Table 1);

b) the mains terminals on energizers designed for connection to the mains (columns 2 and 3 of Table 1);

c) the battery terminals on energizers designed for operation from a battery (columns 4 and 5 of Table 1).

However, no limits apply to the battery terminals of energizers with built-in batteries which cannot be connected to the mains supply, or energizers with external batteries if the connecting lead between the energizer and the battery is shorter than 2 m and is not applicable of being easily extended by the user without special tools.

Type D energizers, according to IEC 60335-2-76, are measured as battery operated energizers with connecting leads between the energizer and the battery greater than 2 m in length.

NOTE In practice, the fence wire can also act as an active source of disturbances, due to the high-voltage discharges, in particular to radio and telecommunication networks. Manufacturers of electric fence energizers should instruct the users to eliminate discharge points such as touching vegetation or a broken fence wire.

4.1.1.5 For battery operated appliances (with built-in batteries, as well as with external batteries) which can be connected to the mains the limits of columns 2 and 3 of Table 1 apply to the mains terminals.

No radio disturbance limits apply to appliances with built-in batteries, which cannot be connected to the mains supply.

No radio disturbance limits apply to appliances with external batteries, if the connecting lead between appliance and battery is shorter than 2 m. If the connecting lead is longer than 2 m or easily extendable by the user without special tools, then the limits of columns 4 and 5 of Table 1 apply to these leads.

A1 4.1.2 Frequency range 30 MHz to 1 000 MHz

4.1.2.1 Disturbance power measurement in the frequency range 30 MHz to 300 MHz

The limits of the disturbance power are given in Table 2a. Disturbance power is measured in accordance with Clause 6, at all terminals.

Table 2a – Disturbance power limits for the frequency range 30 MHz to 300 MHz

	Household and similar appliances		Tools					
1	2	3	4	5	6	7	8	9
Frequency range			Rated motor power not exceeding 700 W		Rated motor power above 700 W and not exceeding 1 000 W		Rated motor power above 1 000 W	
(MHz)	dB (pW) Quasi-peak	dB (pW) Average[a]	dB (pW) Quasi-peak	dB (pW) Average [a]	dB (pW) Quasi-peak	dB (pW) Average [a]	dB (pW) Quasi-peak	dB (pW) Average [a]
30 to 300	Increasing linearly with the frequency from:							
	45 to 55	35 to 45	45 to 55	35 to 45	49 to 59	39 to 49	55 to 65	45 to 55

[a] If the limit for the measurement with the average detector is met when using a receiver with a quasi-peak detector, the equipment under test shall be deemed to meet both limits and the measurement using the receiver with an average detector need not be carried out.

Table 2b – Margin when performing disturbance power measurement in the frequency range 30 MHz to 300 MHz

	Household and similar appliances		Tools					
1	2	3	4	5	6	7	8	9
Frequency range			Rated motor power not exceeding 700 W		Rated motor power above 700 W and not exceeding 1 000 W		Rated motor power above 1 000 W	
(MHz)	dB (pW) Quasi-peak	dB (pW) Average	dB (pW) Quasi-peak	dB (pW) Average	dB (pW) Quasi-peak	dB (pW) Average	dB (pW) Quasi-peak	dB (pW) Average
	Increasing linearly with the frequency from:							
200 to 300	0 to 10 dB	-	0 to 10 dB	-	0 to 10 dB	-	0 to 10 dB	-

NOTE 1 This table only applies if specified in 4.1.2.3.2.

NOTE 2 The measured result at a particular frequency shall be less than the relevant limit minus the corresponding margin (at that frequency). A1

A1 4.1.2.2 Radiated disturbances measurement in the frequency range 30 MHz to 1 000 MHz

The limits of radiated disturbances are given in Table 3. Radiated disturbances are measured in accordance with the standards and testing methods given in Table 3.

Table 3 – Radiated disturbance limits and testing methods for the frequency range 30 MHz to 1 000 MHz

Testing method	Standard	Frequency range MHz	Limit dBµV/m Quasi-peak	Remark
OATS [a] or SAC [b d]	CISPR 16-2-3	30 – 230	30	Measurement distance 10 m
		230 – 300	37	
		300 – 1 000	37	
FAR [e]	CISPR 16-2-3	30 – 230	42 to 35 [f]	Measurement distance 3 m
		230 – 1 000	42	
TEM-Waveguide[c]	IEC 61000-4-20	30 – 230	30	–
		230 – 1 000	37	

NOTE The lower limit is applicable at the transition frequency.

[a] OATS = open area test site

[b] SAC = semi-anechoic chamber

[c] The TEM-waveguide is limited to devices without cables attached and with a maximum size according to subclause 6.1 of IEC 61000-4-20 (The largest dimension of the enclosure at 1 GHz measuring frequency is one wavelength, 300 mm at 1 GHz)

[d] Measurements may be made at closer distance, down to 3 m. An inverse proportionality factor of 20 dB per decade shall be used to normalize the measured data to the specified distance for determining compliance.

[e] FAR = fully anechoic room. All equipment, including floor-standing equipment, shall be measured within the test volume as described in Figure 6 of CISPR 16-2-3.

[f] Decreasing linearly with the logarithm of the frequency.

In any situation where it is necessary to verify the original measurement, the measuring method and measuring distance originally chosen shall be used in order to ensure consistency of the results.

4.1.2.3 Application of the limits

4.1.2.3.1 General

This subclause describes application of the limits for all appliances (see Figure 10).

Regulating controls which incorporate semiconductor devices, electric fence energizers, rectifiers, battery chargers and converters, which do not contain any clock frequency higher than 9 kHz, are not subject to the requirements in the frequency range 30 MHz to 1 000 MHz.

4.1.2.3.2 Mains operated appliances

The equipment under test shall be evaluated for emissions in the 30 MHz to 1 000 MHz range by testing in accordance with either method a) or b), see also Figure 10. A1

A1 a) The limits in columns 2 and 3 of Table 2a for the frequency range from 30 MHz to 300 MHz shall be met by all appliances except for electric tools. For electric tools the particular limits given in columns 4 to 9 of Table 2a apply according to the rated power of the motor, excluding the power of any heating device (for instance heating power in a blower for plastic welding).

Appliances are deemed to comply in the frequency range from 300 MHz to 1 000 MHz if both of the following conditions (1) and 2)) are fulfilled:

1) all emission readings from the equipment under test shall be lower than the applicable limits (Table 2a) reduced by the margin (Table 2b);

2) the maximum clock frequency shall be less than 30 MHz.

If either of condition 1) or 2) is not fulfilled, radiated measurements in the frequency range from 300 MHz to 1 000 MHz shall be conducted and the limits of Table 3 for that range applied. In any case the limits of Table 2a in the frequency range 30 MHz to 300 MHz shall be met.

b) The limits in Table 3 shall be met. Any of the measurement methods mentioned in Table 3 can be selected by the manufacturer except that the TEM-waveguide shall be used only for battery powered appliances not intended to have external cables attached (see also Note c in Table 3).

The test report shall state which method was used and which limits were applied.

4.1.2.3.3 Battery operated appliances

For all battery operated appliances the limits in Table 3 apply for the frequency range from 30 MHz to 1 000 MHz (See also Figure 11). Any of the measurement methods mentioned in Table 3 can be selected by the manufacturer except that the TEM-waveguide shall be used only for battery powered appliances not intended to have external cables attached.

The test report shall state which method was used and which limits were applied. Battery operated appliances which do not contain active electronic circuits or motors shall not be measured. These appliances are considered to comply without testing.

NOTE Examples of active electronic circuits include circuits containing transistors, thyristors and relays. A LED connected to a battery via a manual switch is not an active electronic circuit if the current is limited only by a resistor or a transistor operating linearly, but it is an active switching circuit if the current is pulsed using a transistor. A1

4.2 Discontinuous disturbance

Switching operations in thermostatically controlled appliances, automatic programme controlled machines and other electrically controlled or operated appliances generate discontinuous disturbance. The subjective effect of discontinuous disturbance varies with repetition rate and amplitude in audio and video presentation. Therefore distinction is made between various kinds of discontinuous disturbance.

The discontinuous disturbance is only measured with a measuring receiver including a quasi-peak detector as mentioned in 5.1.1 and specified in Clause 4 of CISPR 16-1-1.

See Annex C for guidance.

4.2.1 The limits for discontinuous disturbance depend mainly on the character of the disturbance and on the click rate *N* as given in detail in 4.2.2 and 4.2.3.

No discontinuous disturbance limits apply in the frequency range 30 MHz to ⟦A1⟩1 000⟨A1⟧ MHz.

NOTE The level of disturbances below 30 MHz is interpreted as an indication for the level above 30 MHz.

4.2.2 Frequency range 148,5 kHz to 30 MHz (terminal voltages)

4.2.2.1 The limits of Table 1 apply also to discontinuous disturbances from all equipment which produce:

a) disturbances other than clicks, or

b) clicks with a click rate *N* equal to or greater than 30.

Appliances as described in 4.2.3 are exempted.

NOTE Examples of discontinuous disturbances for which the limits for continuous disturbance apply are shown in Figures 4a and 4b.

4.2.2.2 For discontinuous disturbance, the click limit L_q is attained by increasing the relevant limit *L* (as given in 4.1.1) with:

44 dB for $N < 0{,}2$, or

20 lg (30/*N*) dB for $0{,}2 \leq N < 30$

NOTE Examples of discontinuous disturbances which are classified as clicks are shown in Figures 3a, 3b and 3c.

See also Annex A, Table A.1 and Table A.2.

4.2.2.3 The click limit L_q applies for click rates *N* determined under operating conditions and interpretation of results as specified in Clause 7.

4.2.3 Exceptions from the click definition

Under certain conditions some kinds of discontinuous disturbances are exempted from the definition of a click (see 3.2).

This subclause contains these exceptions which are applicable in combination with subclauses 4.2.1 and 4.2.2 to all kinds of appliances. In Figure 9, a flow diagram shows how to take these conditions into account in the verification procedure.

Product specific relaxations are contained in Annex A, which contains also Table A.2, a list of appliances for which the switching operations are counted, to derive the click rate *N*.

4.2.3.1 Individual switching operations

The disturbance from individual switching operations, caused directly or indirectly, manually or by similar activities on a switch or a control which is included in an appliance or otherwise to be used for:

a) the purpose of mains connection or disconnection only;

b) the purpose of programme selection only;

c) the control of energy or speed by switching between a limited number of fixed positions;

d) the changing of the manual setting of a continuously adjustable control such as a variable speed device for water extraction or electronic thermostats, is to be disregarded for the purpose of testing the appliance for compliance with the limits of radio disturbance set out in this standard.

Examples of switches included in this subclause are the on/off switches for apparatus (including foot activated), for instance the switch for an electric typewriter, manual switches for heat and air flow control in fan heaters and hair dryers, as well as the indirectly operated switch in a cupboard, wardrobe or refrigerator, and sensor-operated switches, etc. Switches which usually will be repeatedly operated are not included in this subclause, e.g. for sewing machines, calculating machines, soldering equipment, etc. (see 7.2.3. and 7.3.2.4.c).

Also the disturbance caused by the operation of any switching device or control which is included in an appliance for the purpose of mains disconnection for safety only, is to be disregarded for the purpose of testing the appliance for compliance with the limits of radio disturbance as described in this standard.

4.2.3.2 Combination of clicks in a time frame less than 600 ms

In programme controlled appliances a combination of clicks in a time frame less than 600 ms is allowed once per selected programme cycle.

For other appliances such a combination of clicks is allowed once during the minimum observation time. This is also valid for thermostatically controlled three-phase switches, causing three disturbances sequentially in each of the three phases and the neutral. The combination of clicks is considered as one click.

4.2.3.3 Instantaneous switching

Appliances which fulfil the following conditions:

– the click rate is not more than 5,

– none of the caused clicks has a duration longer than 20 ms,

– 90 % of the caused clicks have a duration less than 10 ms,

shall be deemed to comply with the limits, independent of the amplitude of the clicks (see tables A.1 and A.2). If one of these conditions is not satisfied then the limits in accordance with 4.2.2 apply.

4.2.3.4 Separation of clicks less than 200 ms

For appliances which have a click rate less than 5, any two disturbances each having a maximum duration of 200 ms, shall be evaluated as two clicks even when the separation between the disturbances is less than 200 ms.

In this case, for instance observed with refrigerators, the example shown in Figure 4b, would be evaluated as two clicks and not as continuous disturbance.

5 Methods of measurement of terminal disturbance voltages (148,5 kHz to 30 MHz)

This clause lays down the general requirements for the measurement of disturbance voltage produced at the terminals of apparatus.

The operating conditions are given in Clause 7 of this standard.

5.1 Measuring devices

The measuring devices given below are to be used:

5.1.1 Measuring receivers

Receivers with quasi-peak detectors shall be in accordance with Clause 4 of CISPR 16-1-1; receivers with average detectors shall be in accordance with Clause 6 of CISPR 16-1-1.

NOTE Both detectors may be incorporated in a single receiver and measurements carried out either using the quasi-peak detector or the average detector.

5.1.2 Artificial mains network

The artificial mains V-network is required to provide a defined impedance at high frequencies between the terminals of the equipment under test and reference ground, and also to isolate the test circuit from unwanted radio-frequency signals on the supply mains.

The artificial mains V-network 50 Ω/50 μH (or 50 Ω/50 μH + 5 Ω) as defined in Clause 4 of CISPR 16-1-2 shall be used.

To ensure that, at the frequency of measurement, the impedance of the mains does not materially affect the impedance of the artificial mains V-network, a suitable radio-frequency impedance shall be inserted between the artificial mains V-network and the supply mains. This impedance will also reduce the effect of unwanted signals which occur on the supply mains (see also 5.3).

The connection between the artificial mains V-network and the measuring receiver shall be made by means of a coaxial cable with a characteristic impedance of 50 Ω.

5.1.3 Voltage probe

The voltage probe shall be used when measuring on terminals other than mains terminals (see 5.2.3.2) e.g. load and control terminals (5.2.4.4). The voltage probe shall also be used on mains terminals when the artificial mains V-network cannot be used without unduly influencing the equipment under test or the test equipment, e.g. while measuring motors and heating devices operating at more than 25 A per phase.

The voltage probe contains a resistor having a resistance value of at least 1 500 Ω in series with a capacitor with a reactive value negligible to the resistance (in the range 150 kHz to 30 MHz) (see 5.2 of CISPR 16-1-2).

The measuring results shall be corrected according to the voltage division between the probe and the measuring set. For this correction only the resistive parts of the impedances shall be taken into account.

If the function of the equipment under test is affected by the impedance of the probe being too low, its impedance (at 50/60 Hz and at radio frequencies) shall be increased as needed (for example 15 kΩ in series with 500 pF).

5.1.4 Artificial hand

In order to simulate the influence of the user's hand, application of the artificial hand is required for hand held equipment during the disturbance voltage measurement.

The artificial hand consists of metal foil which is connected to one terminal (terminal M) of an RC element consisting of a capacitor of 220 pF ± 20 % in series with a resistor of 510 Ω ± 10 % (see Figure 8a); the other terminal of the RC element shall be connected to the reference ground of the measuring system (see CISPR 16-1-2). The RC element of the artificial hand may be incorporated in the housing of the artificial mains network.

5.1.5 Disturbance analyzer for discontinuous disturbance

The measuring equipment for discontinuous disturbance shall comply with Clause 10 of CISPR 16-1-1. An alternative method using an oscilloscope may be applied provided that the degree of accuracy is sufficient.

For the measurement of the duration of the disturbance, see CISPR 16-1-1.

5.2 Measuring procedures and arrangements

5.2.1 Arrangement of the leads of the equipment under test

NOTE Clause 5 and Annex A of CISPR 16-2-1 give more information about the connection of the electrical appliances to the measuring equipment.

5.2.1.1 Mains lead

During all measurements of disturbance terminal voltages (on the mains terminals or on other terminals) the artificial mains V-network is connected to the mains terminals in order to provide a defined termination. As described in detail in 5.2.2 the V-network is situated at a distance of 0,8 m from the appliance.

The disturbance voltage measurements are normally to be made at the plug end of the lead.

If the mains lead of the appliance under test is longer than necessary to be connected to the V-network the length of this lead in excess of 0,8 m shall be folded back and forth parallel to the lead so as to form a horizontal bundle with a length between 0,3 m and 0,4 m. In the case of controversy with regard to the banning of sales or withdrawal of a type approval it may be replaced by a lead of similar quality with a length of 1 m.

If the lead on which the measurements are to be made is shorter than the required distance between the appliance and the mains V-network, it shall be extended to the necessary length.

If the mains lead of the appliance under test includes the earthing conductor, the plug end of the earthing conductor shall be connected to the reference ground of the measuring equipment.

Where an earthing conductor is required, but is not included in the lead, the connection of the earth terminal of the appliance to the reference ground of the measuring equipment shall be made by a lead not longer than necessary to be connected to the V-network running parallel to the mains lead at a distance of not more than 0,1 m from it.

If the appliance is not supplied with a lead it is to be connected to the artificial mains V-network by a lead not longer than 1 m (also in case of plug or socket-outlet).

5.2.1.2 Other leads

The lead connecting the appliance with an auxiliary apparatus and the leads to regulating controls or to batteries of battery-powered appliances shall be treated in accordance with 5.2.1.1 except where otherwise stated in this standard.

5.2.2 Disposition of appliances under test and their connection to the artificial mains V-network

5.2.2.1 Appliances normally operated without an earth connection and not held in the hand

The appliance shall be placed 0,4 m above an earthed conducting surface of at least 2 m × 2 m in size and at a distance of 0,8 m from the artificial mains V-network and shall be kept at least 0,8 m from any other earthed conducting surface. If the measurements are made in a screened enclosure, the distance of 0,4 m may be referred to one of the walls of the enclosure.

Equipment that, according to its design and/or weight, usually stands on the floor while in use (so-called floor standing equipment) is subject to the same provisions as above.

However,

- the equipment shall be placed on a horizontal metal ground plane (the reference ground plane), but isolated from it by a non-metallic support (such as a pallet) of 0,1 m ± 25 % in height;
- the lead shall be led downward along the EUT to the level of the non-metallic support and be led horizontally to the artificial V-network;
- the artificial V-network shall be bonded to the reference ground plane (see CISPR 16-2-1);
- the reference ground plane shall extend at least 0,5 m beyond the boundaries of the EUT and have minimum dimensions of 2 m by 2 m.

5.2.2.2 Handheld appliances which are normally operated without an earth connection

Measurements shall first be made in accordance with 5.2.2.1.

Additional measurements shall then be made using the artificial hand described in 5.1.4.

The general principle to be followed in the application of the artificial hand is that the metal foil shall be wrapped around all handles, both fixed and detachable, supplied with the appliance and the terminal M shall additionally be connected to any exposed non-rotating metalwork as specified in 5.2.2.2.2 to 5.2.2.2.4.

Metalwork which is covered with paint or lacquer is considered as exposed metalwork and shall be directly connected to the terminal M of the RC element.

The artificial hand shall be applied only on the handles and grips and those parts of the appliance specified as such by the manufacturer. Failing the manufacturer's specification, the artificial hand shall be applied in the following way:

5.2.2.2.1 When the casing of the appliance is entirely of metal, no metal foil is needed, but the terminal M of the RC element shall be connected directly to the body of the appliance.

5.2.2.2.2 When the casing of the appliance is of insulating material, metal foil shall be wrapped round the handles, e.g. in Figure 8b, around handle B, and also round the second handle D, if present. Also metal foil 60 mm wide shall be wrapped round the body C at that point where the iron core of the motor stator is located, or around the gearbox if this gives a higher disturbance level. All these pieces of metal foil, and the ring or bushing A, if present, shall be connected together and to the terminal M of the RC element.

5.2.2.2.3 When the casing of the appliance is partly metal and partly insulating material, and has insulating handles, metal foil shall be wrapped round the handles, as handles B and D in Figure 8b. If the case is non-metallic at the location of the motor, a metal foil 60 mm wide shall be wrapped round the body C at that point where the iron core of the motor stator is located, or alternatively around the gearbox, if this is of insulating material and a higher disturbance level is obtained. The metal part of the body, the point A, the metal foil round the handles B and D and the metal foil on the body C shall be connected together and to the terminal M of the RC element.

5.2.2.2.4 When a class II appliance has two handles of insulating material A and B and a case of metal C, for example an electric saw (Figure 8c), metal foil shall be wrapped round the handles A and B. The metal foil at A and B and the metal body C shall be connected together and to the terminal M of the RC element.

NOTE Classes 0, I, II and III according to IEC 61140: Classification of electrical and electronic equipment with regard to protection against electric shock.

5.2.2.3 Appliances normally required to be operated with an earth connection

The appliance shall be placed at a distance of 0,8 m from the artificial mains V-network, the disturbance voltages to be measured in accordance with 5.2.1.

The measurements shall be made with the earth terminal of the appliance connected to the reference ground of the measuring equipment.

If the appliance is not supplied with a lead the connection of the earth terminal of the appliance to the reference ground of the measuring equipment shall be made by a lead running parallel to the mains lead and of the same length and at a distance of not more than 0,1 m from it.

If the enclosure of the appliance is of non-conducting material, the appliance shall be tested as described in 5.2.2.1.

Appliance that, according to its design and/or weight, usually is standing on the floor while being in use (so-called floor standing equipment) is subject to the same provision as above.

However,

- it shall be placed on a horizontal metal ground plane (the reference ground plane), but insulated from it by a non-metallic support (e.g. a pallet) of 0,1 m ± 25 % in height. If the measurements are made in a screened enclosure, the distance of 0,1 m ± 25 % shall be referred to the metal ground of the screened enclosure;
- the boundaries of the appliance shall have a distance of at least 0,4 m to a grounded vertical conducting surface of at least 2 m × 2 m in size. If the measurements are made in a screened enclosure, the distance of 0,4 m shall be referred to the nearest wall of the enclosure;
- the reference ground plane shall extend at least 0,5 m beyond the boundaries of EUT.
- the V-network shall be bonded with metal straps to the reference ground plane (see CISPR 16-2-1);

– the reference ground plane shall be bonded with the vertical surface by a low impedance connection.

5.2.3 Appliances having auxiliary apparatus connected at the end of a lead other than the mains lead

NOTE 1 Regulating controls incorporating semiconductor devices are excluded from this subclause, as these are covered in 5.2.4.

NOTE 2 When the auxiliary apparatus is not essential to the operation of the appliance and has a separate test procedure specified elsewhere in this standard (e.g. power nozzle of a vacuum cleaner) this subclause does not apply. The main appliance is tested as an individual appliance.

Connecting leads exceeding 1 m in length are arranged in accordance with 5.2.1.1.

Measurements need not to be made when the connecting lead between the appliance and the auxiliary apparatus is permanently fixed at both ends, and is either shorter than 2 m, or if it has a shielding whose ends are connected to the metal housing of the appliance and that of the auxiliary apparatus.

The measurement of the terminal voltage on non-rewirable leads longer than 2 m and shorter than 10 m shall be started at a frequency according to the following formula:

$$f_{\text{start}} = 60 / L$$

where

f_{start} is the start frequency for the measurement of the terminal voltage, in megahertz;

L is the length of the connecting lead between the appliance and the auxiliary apparatus, in metres.

NOTE This calculation is based on the requirement that the length of the auxiliary lead shall not exceed one-fifth of the wave length, corresponding to the start frequency of the measurement.

5.2.3.1 Measuring arrangement

The equipment under test shall be arranged in accordance with 5.2.2 with the following additional requirements:

a) The auxiliary apparatus shall be placed at the same height and distance from the earthed conducting surface as the main appliance, and if the auxiliary lead is long enough, at a distance of 0,8 m from the main appliance, 5.2.1.1 shall be observed.

   If the auxiliary lead is shorter than 0,8 m, the auxiliary apparatus shall be placed at the longest possible distance from the main apparatus.

   If the auxiliary lead is longer than 0,8 m, the length of the auxiliary lead in excess of 0,8 m shall be folded parallel to itself so as to form a horizontal bundle with a length between 0,3 m and 0,4 m.

   The auxiliary lead is stretched in the opposite direction to the mains lead.

   When the auxiliary apparatus contains controls, the arrangements for its operation must not unduly affect the level of disturbance;

b) If an appliance having an auxiliary apparatus is earthed, no artificial hand shall be connected. If the appliance itself is made to be held in the hand, the artificial hand shall be connected to the appliance and not to any auxiliary apparatus;

c) If the appliance is not made to be held in the hand, the auxiliary apparatus which is not earthed and is made to be held in the hand shall be connected to the artificial hand; if the auxiliary apparatus is not made to be held in the hand either, it shall be placed above an earthed conducting surface as described in 5.2.2.1.

5.2.3.2 Measuring procedure

In addition to the measurement on the terminals for the mains connection, measurements are conducted on all other terminals for incoming and outgoing leads (e.g. control and load lines) using a probe as described in 5.1.3 in series with the input of the measuring receiver.

The auxiliary apparatus, control or load is connected to allow measurements to be made under all provided operating conditions and during interactions between the appliance and the auxiliary apparatus.

Measurements are performed both on the terminals of the appliance and on those of the auxiliary apparatus.

5.2.4 Regulating controls incorporating semiconductor devices

5.2.4.1 The regulating control shall be arranged as shown in Figure 5. The output terminal of the control shall be connected to a load of the correct rated value by leads of 0,5 m to 1 m length.

Unless otherwise specified by the manufacturer, the load shall consist of incandescent lamps.

5.2.4.2 When a regulating control or its load is to be operated with an earth connection (i.e. Class I equipment) then the earth terminal of the regulating control shall be connected to the earth terminal of the artificial mains V-network. The earth terminal of the load, if any, is connected to the earth terminal of the regulating control, or, if not available, directly to the earth terminal of the artificial mains V-network.

5.2.4.3 The control shall first be measured in accordance with the provisions of 5.2.2.1 or 5.2.2.3.

5.2.4.4 Secondly, measurement of the disturbance voltage is made at the load terminals using a probe as described in 5.1.3 in series with the input of the measuring receiver.

5.2.4.5 For regulating controls having additional terminals for connection to a remote sensor or control unit, the following further provisions apply:

a) The additional terminals shall be connected to the remote sensor or control unit by leads of 0,5 m to 1 m length. If a special lead is provided, the length of this lead in excess of 0,8 m shall be folded back and forth parallel to the lead so as to form a horizontal bundle with a length between 0,3 m and 0,4 m.
b) Measurement of the disturbance voltage at the additional terminals of the regulating control shall be carried out in the same way as described in 5.2.4.4 for the load terminals.

5.3 Reduction of disturbance not produced by the equipment under test

Any measurable disturbance voltage not caused by the equipment under test (arising from the supply mains or produced by extraneous fields), shall give an indication on the measuring set at least 20 dB below the lowest voltage to which it is desired to measure.

Should the background noise not be at least 20 dB below the measurement level, it should be quoted in the results of measurement.

The disturbance voltages not caused by the equipment to be tested are measured when the equipment under test is connected but not operated.

NOTE Realization of this condition may require the addition of a supplementary filter in the supply mains and the measurements may have to be made in a screened enclosure.

6 Methods of measurement of disturbance power (30 MHz to 300 MHz)

This clause lays down the general requirements for the measurement of disturbance power produced at the terminals of apparatus.

The operating conditions are given in Clause 7 of this standard.

It is generally considered that for frequencies above 30 MHz the disturbing energy is propagated by radiation to the disturbed apparatus.

Experience has shown that the disturbing energy is mostly radiated by the part of the mains leads and other leads near the appliance. It is therefore agreed to define the disturbing capability of an appliance as the power it could supply to its leads. This power is nearly equal to that supplied by the appliance to a suitable absorbing device placed around these leads at the position where the absorbed power is at its maximum.

Calibration is accomplished in accordance with Annex B of CISPR 16-1-2.

6.1 Measuring devices

6.1.1 Measuring receivers

Receivers with quasi-peak detectors shall be in accordance with Clause 4 of CISPR 16-1-1; receivers with average detectors shall be in accordance with Clause 6 of CISPR 16-1-1.

NOTE Both detectors may be incorporated in a single receiver and measurements carried out either using the quasi-peak detector or the average detector.

6.1.2 Absorbing clamp

The absorbing clamp shall be in accordance with Clause 4 of CISPR 16-1-3.

6.2 Measurement procedure on the mains lead

A1 **6.2.1** The distance between the clamp test set-up (the appliance, the lead to be measured and the absorbing clamp) and any other conductive objects (including persons, walls and ceiling, but excluding the floor) shall be at least 0,8 m. The appliance to be tested shall be placed on a non-metallic support table parallel to the floor. The height of the table shall be 0,1 m ± 0,025 m for appliances primarily intended to be positioned on the floor in normal use, and 0,8 m ± 0,05 m for other appliances.

The lead to be measured is placed in a straight line for a distance sufficient to accommodate the absorbing clamp, and to permit the necessary measuring adjustment of position for tuning. The clamp is placed around the lead. A1

6.2.2 The absorbing clamp is positioned for maximum indication at each test frequency: the clamp shall be moved along the lead until the maximum value is found between a position adjacent to the appliance and a distance of about a half-wavelength from it.

NOTE The maximum may occur at a distance close to the appliance.

6.2.3 The straight portion of the lead to be measured on should therefore be about 6 m long, this being equal to $\lambda_{max}/2$ + 0,6 m in order to allow at any time the positioning of the absorbing clamp and a possible second clamp for additional isolation.

If the original lead of the appliance is shorter than the necessary length it shall be extended or replaced by a similar lead.

Any plug or socket which will not pass through the absorbing clamp due to its size shall be removed or, especially in the case of controversy with regard to the banning of sales or withdrawal of a type approval the lead may be replaced by a lead of similar quality with the necessary length.

NOTE λ_{max} is the wavelength corresponding to the lowest frequency at which measurements are to be made for instance 10 m at 30 MHz.

6.2.4 If the r.f. isolation between mains supply and the input of the absorbing clamp on the side of the appliance appears to be insufficient, a fixed ferrite clamp (see CISPR 16-1-3) should be placed along the lead at a distance of about 6 m from the appliance. This improves the stability of the loading impedance and reduces extraneous noise coming from the mains supply. For more information see Clause 4 of CISPR 16-1-3.

6.3 Special requirements for appliances having auxiliary apparatus connected at the end of a lead other than the mains lead

6.3.1 Measuring arrangement

6.3.1.1 Auxiliary leads normally extendible by the user, for instance with a loose end or leads fitted with a (by the user) easily replaceable plug or socket on one or both ends, shall in accordance with 6.2.3 be extended to a length of about 6 m. Any plug or socket which will not pass through the absorbing clamp due to its size shall be removed (see 6.2.3).

6.3.1.2 If the auxiliary lead is permanently fixed to the appliance and to the auxiliary apparatus and:

- is shorter than 0,25 m, measurement are not to be made on these leads;
- is longer than 0,25 m but shorter than twice the length of the absorbing clamp, it shall be extended to twice the length of the absorbing clamp;
- is longer than twice the length of the absorbing clamp, measurements shall be made using the original lead.

When the auxiliary apparatus is not necessary for the operation of the main appliance (e.g. a power nozzle to a vacuum cleaner) and a separate test procedure for the auxiliary apparatus is specified elsewhere in this standard, only the lead, but not the auxiliary apparatus, shall be connected. (However, all measurements on the main appliance in accordance with 6.3.2 are to be made.)

6.3.2 Measurement procedure

6.3.2.1 Measurement of the disturbance power is made firstly on the mains lead of the main appliance using the absorbing clamp in accordance with 6.2. Any lead connecting the main appliance to an auxiliary apparatus is disconnected if this does not affect the operation of the appliance, or is isolated by means of ferrite rings (or an absorbing clamp) close to the appliance.

6.3.2.2 Secondly, a similar measurement is made on each lead which is or may be connected to an auxiliary apparatus, whether or not it is necessary for the operation of the appliance; the current transformer of the clamp pointing towards the main appliance. Isolation, or disconnection of the mains lead and other leads is made in accordance with 6.3.2.1.

NOTE For short, permanently connected leads the movement of the clamp (as described in 6.2.3) is limited by the length of the lead.

6.3.2.3 In addition, measurement is made as above but with the current transformer of the clamp pointing towards any auxiliary apparatus, unless this auxiliary apparatus is not needed for the operation of the main appliance and a separate test procedure for it is specified elsewhere (no disconnection or r.f. isolation of other leads is of course necessary in this case).

6.4 Assessment of measuring results

The measured power is derived from the maximum indicated value found at each frequency of measurement and the calibration curve of the absorbing clamp (see also the example given in Annex B of CISPR 16-1-3).

7 Operating conditions and interpretation of results

When measurements of disturbance are being made, the appliance shall be operated under the following conditions:

7.1 General

7.1.1 Normal load conditions shall be as defined in 7.2 and 7.3, unless these are in conflict with the manufacturer's instruction for use, which in such cases take precedence. Where appliances are not covered by these subclauses, the manufacturer's instruction for use shall be followed.

7.1.2 The duration of operation is not restricted unless the appliance is marked accordingly. In this case the limitations shall be complied with.

7.1.3 No running-in time to be specified but, prior to testing, the appliance shall be operated for a sufficient period to ensure that the conditions of operation will be typical of those during normal life of the equipment. Running-in of motors shall be carried out by the manufacturer.

7.1.4 The appliances shall be operated from a supply that provides the rated voltage and the rated frequency of the appliance.

A test at about 160 kHz and at about 50 MHz shall be made over a range of 0,9 to 1,1 times the rated voltage in order to check whether the level of disturbance varies considerably with the supply voltage; in which case, the measurements are to be made at the voltage that causes maximum disturbance.

If an appliance has a rated voltage range, the multipliers 0,9 and 1,1 apply to the lowest and highest, most common nominal supply voltages that fall within the rated voltage range that is specified by the manufacturer.

NOTE The most common nominal supply voltages are 100 V, 110 V, 115 V, 120 V, 127 V, 220 V, 230 V, 240 V and 250 V.

If an appliance has more than one rated voltage the multipliers 0,9 and 1,1 apply to the rated voltage that causes maximum disturbance.

For appliances with a frequency range of 50 Hz to 60 Hz, a test at about 160 kHz and at about 50 MHz shall be made using supply frequencies of 50 Hz and 60 Hz at the above determined supply voltage, in order to check whether the level of disturbance varies considerably with the supply frequency; in which case, the measurements are to be made at the supply frequency which causes maximum disturbance.

7.1.5 Speed controls with a limited number of fixed positions are to be adjusted to approximately average and to maximum speed, the higher reading to be registered if there is no instruction to the contrary in this standard.

Apparatus which incorporate electronic regulating controls shall have the controls adjusted for maximum disturbance in accordance with the procedure outlined in 7.2.6.1, in both frequency ranges 148,5 kHz to 30 MHz and 30 MHz to [A1⟩1 000⟨A1] MHz.

If the setting of continuously adjustable controls, which are not designed for frequent adjustment in normal use, has been pre-set, it shall not be adjusted during the test.

7.1.6 The ambient temperature shall lie within the range 15 °C to 35 °C.

7.2 Operating conditions for particular equipment and integrated parts

7.2.1 Multifunction equipment

Multifunction equipment which is subjected simultaneously to different clauses of this standard and/or other standards shall be tested with each function operated in isolation, if this can be achieved without modifying the equipment internally. The equipment thus tested shall be deemed to have complied with the requirements of all clauses/standards when each function has satisfied the requirements of the relevant clause/standard.

For equipment for which it is not practical to test with each function operated in isolation, or where the isolation of a particular function would result in the equipment being unable to fulfil its primary function, the equipment shall be deemed to have complied only if it meets the provisions of each clause/standard with the necessary functions operative.

7.2.2 Battery operated [A1⟩ appliances

The appliance shall be tested operating in each permitted mode and in accordance with the operating conditions given in 7.3. ⟨A1]

In the frequency range 148,5 kHz to 30 MHz measurements on equipment with external batteries are made at the terminals of the connecting lead using a probe as described in 5.1.3 in series with the input of the measuring receiver. Equipment which is made to be held in the hand shall be connected to the artificial hand.

In the frequency range 30 MHz to 300 MHz measurement on equipment with external batteries are made as described in 6.3.2.2 with the current transformer of the clamp pointing toward the appliance.

7.2.3 Integrated starting switches, speed controls, etc.

For starters, speed controls etc. incorporated in appliances like sewing machines and similar apparatus given in Table A.2 the second paragraph of 7.4.2.3 applies.

7.2.3.1 Starters and speed control of sewing machines and dental drills. To determine the disturbance generated during starting and stopping the speed of the motor shall be increased to maximum speed over a 5 s period. For stopping, the control shall be reset quickly to its off position. To determine the click rate *N*, the period between two starts shall be 15 s.

7.2.3.2 Starting switches in adding machines, calculating machines and cash registers shall be operated intermittently with at least 30 starts per minute. If 30 starts per minute cannot be attained, then intermittent operation with as many starts per minute as possible in practice shall be used.

7.2.3.3 Picture change devices of slide-projectors. To determine the click rate *N*, the device shall be operated with the lamp switched on and with four picture-changes per minute without slides.

7.2.4 Thermostats

Separate as well as incorporated thermostats for the control of electric room or water heaters, oil and gas burners and the like.

Thermostats for, or integrated in permanently installed room heating equipment intended for stationary use shall be allocated with a click rate *N* which is five times the click rate determined for a single, portable or removable room heater.

The click rate *N* shall be determined for the maximum operating rate stated by the manufacturer or – if sold for or together with a heater or burner – for a duty-cycle of (50 ± 10) % of this heater or burner.

The amplitude and duration of the disturbance shall be measured for the lowest rated current of the thermostat. For thermostats which have an acceleration resistor incorporated, the same measurements shall be performed in addition, without any separate heater connected.

When, in practice, the thermostat may be used together with inductive loads (e.g. relay, contactor) all measurements shall be performed using such a device, having the highest coil inductance used in practice.

In order to obtain a satisfactory measurement, it is essential that the contacts shall be operated for a sufficient number of times with a suitable load to ensure that the levels of disturbance are representative of those encountered in normal operation.

NOTE 1 For appliances containing thermostatically operated switches 7.3.4 is to be observed.

NOTE 2 If a thermostat is integrated in an appliance which it does not control, it is to be treated according to 7.2.4 or 7.3.4.14.

7.2.5 Thermostats – Alternative procedure to that specified in 7.2.4

For thermostats following this alternative procedure the subclauses 4.2.3.2, 4.2.3.4 and the flow diagram of Figure 9 are not applicable.

7.2.5.1 For thermostats, separate or incorporated in a control box, e.g. with timer, intended to be integrated in a fixed room heating installation, the manufacturer shall specify the maximum operating switching rate. The click rate *N* shall be derived from this specification. Failing that, a click rate *N* = 10 shall be used, and L_q shall be determined, see 4.2.2.2.

The thermostat shall be caused to operate for 40 contact operations (20 opening and 20 closing), either manually by actuating of the temperature setting means, or automatically by e.g. a hot/cold blower.

The amplitude and duration of the disturbance shall be measured for the lowest rated current of the thermostat. In the absence of a marked or a declared minimum rated current, a current equal to 10 % of the maximum rated current is used. The amplitude of no more than 25 % of the disturbances shall exceed the L_q level. For thermostats which have an acceleration resistor incorporated, the same measurements shall be performed in addition without any separate load connected.

When, in practice, the thermostat may be used together with inductive loads (e.g. relay, contactor) all measurements shall be performed using such a device, having the highest coil inductance allowed for by the manufacturer's specification.

Prior to test, it is essential that the contacts shall be operated for a hundred times with the rated load.

NOTE This is to ensure that the levels of disturbance are representative of those encountered in normal operations.

7.2.5.2 Thermostatically controlled three-phase switches

Thermostatically controlled three-phase switches shall be treated as thermostats (see 7.2.5.1). Where no manufacturer's specification is given, a clickrate *N* = 10 shall be used.

7.2.5.3 Thermostatically controlled portable and removable room heating appliances

For portable and movable room heating appliances the manufacturer shall specify the maximum operating switching rate. The click rate *N* shall be derived from this specification, and the procedure in 7.2.5.1 shall be followed.

Where no manufacturer's specification is given, a click rate *N* = 10 shall be used, following the procedure in 7.2.5.1, or the click rate *N* shall be determined for a duty-cycle of (50 ± 10) % of the control device. The procedure of Figure 9 shall be followed.

The power range switch, if any, shall be in the lowest position.

Prior to test, it is essential that the contacts shall be operated for a hundred times with the rated load.

NOTE This is to ensure that the levels of disturbance are representative of those encountered in normal operations.

7.2.6 Regulating controls incorporating semiconductor devices

A1 *Note deleted* A1

7.2.6.1 Adjustments for maximum disturbance level

The regulating control shall be adjusted to give a maximum indication on the meter at each frequency of measurement. After the value of the disturbance is registered at each preferred frequency (see 7.4.1.3) the frequency band adjacent to the preferred frequency is scanned without adjustment to the regulating control and the highest disturbance values are noted (for instance scan between 150 kHz and 240 kHz with the regulating control set at the value that gave the maximum on the meter at 160 kHz).

7.2.6.2 Equipment with several regulating controls

The following measurement procedure shall be applied to appliances containing several individually adjustable regulating controls each one having a maximum rated load current of not more than 25 A.

It shall be applied both on appliances where several regulating controls are connected to the same phase of the mains and to appliances where the regulating controls are connected to separate phases of the mains.

7.2.6.2.1 Each regulating control is tested separately. Measurements are made in accordance with 7.2.6.1 on all terminals of the appliance.

If separate switches are provided for the individual regulating controls, the units not being used should be switched off during these tests.

7.2.6.2.2 As many individual regulating controls as possible are connected to their loads without the maximum current per phase to the appliance exceeding 25 A when each of the controls is carrying its maximum rated current.

When not all individual controls can be connected to their maximum load, those controls are given priority which gave the highest disturbance values when tested in accordance with 7.2.6.2.1.

NOTE The controls may be different for different frequencies or for different terminals.

The setting of the individual controls shall be the same as those giving maximum disturbance during the measurement in accordance with 7.2.6.2.1. In addition a simple check shall be made that no other setting will give greater disturbance. Measurements are made on the mains terminals, all phases and neutral, on the terminals to the loads and on additional terminals of the appliance.

This test is not made when each individual regulating control consists of an entirely self-contained regulating circuit including all suppression components and operates independently of the others and does not control, either by design or fortuitously, any load that another individual regulator is controlling.

7.3 Standard operating conditions and normal loads

7.3.1 Motor-operated appliances for household and similar purposes

7.3.1.1 Vacuum cleaners

7.3.1.1.1 Vacuum cleaners without auxiliary apparatus shall be measured while operating continuously without accessories and with an empty dust bag in place. Vacuum cleaners with a mains lead retracted by an automatic cord reel are to be measured with the mains lead pulled out completely, in accordance with 5.2.1.1.

7.3.1.1.2 For leads integrated in the suction hose of vacuum cleaners, see 4.1.1.2.

7.3.1.1.3 For the frequency range 30 MHz to 300 MHz the measurement of disturbance power shall be performed with the absorbing clamp (in addition to the measurement at the mains terminals) by replacing the suction hose and its integrated lead (but only if the plug or socket is easily replaceable by the user) with a flexible cord connected to the terminals on the main unit and of necessary length having the same number of wires as provided in the originally submitted suction hose.

7.3.1.1.4 Auxiliary power nozzles of vacuum cleaners shall be operated continuously without mechanical load on the brushes. The cooling, if necessary, shall be provided by a non-metallic hose.

If the power nozzle is connected by a non-detachable supply lead having a total length shorter than 0,4 m or if connected directly by plug and socket to the vacuum cleaner they shall be measured together. In all other cases, the appliances shall be measured separately.

7.3.1.2 Floor polishers shall be operated continuously without any mechanical load on the polishing brushes.

A1 7.3.1.3 Coffee grinders and coffee makers

7.3.1.3.1 Coffee grinders

Coffee grinders with a timer shall be operated without load for the maximum duration allowed by the timer.

Coffee grinders without a timer shall be operated without load for the duration taken to grind the maximum quantity of roasted coffee beans stated in the instructions.

If it is not possible to operate the grinder without load, the grinder shall be operated using the maximum quantity of roasted coffee beans stated in the instructions.

7.3.1.3.2 Coffee makers and espresso makers with integrated grinder

Coffee makers and espresso makers with integrated grinder shall be tested according to 7.2.1. The grinder function shall be tested according to 7.3.1.3.1.

If the operation time of the coffee grinder can be set by the user, it should be set to maximum duration.

7.3.1.3.3 Fully automatic coffee makers

Fully automatic coffee makers shall be tested according to 7.2.1. The different functions shall be tested sequentially so that all possible disturbance sources are covered.

The test conditions shall reflect the normal operation of the appliance, as stated in the instructions for use. Where these are not specified, the following separate modes of operation shall be tested:

- keep warm mode for fully automated coffee makers;
- pre-heating for espresso coffee makers;
- 1 cup of coffee (approximately 125 ml) per minute;
- 200 ml hot water, followed by 30 s pause;
- 20 s steam consumption per minute. A1

7.3.1.4 Food mixers (kitchen machines), liquid-mixers, blenders, liquidizers shall be operated continuously without load. For speed controls, see 7.1.5.

7.3.1.5 Clocks shall be operated continuously.

7.3.1.6 Massage apparatus shall be operated continuously without load.

7.3.1.7 Fans, cooker extractor hoods shall be operated continuously with maximum air flow; the fans shall be operated with and without heating, if this facility is provided. For thermostatically controlled switches, see 7.3.4.14. For fans and extractor hoods with electronic regulating controls 7.1.5 applies in addition.

7.3.1.8 Hair-dryers shall be operated as in 7.3.1.7. For thermostatically controlled switches see 7.3.4.14.

7.3.1.9 Refrigerators and freezers shall be operated continuously with the door closed. The thermostat shall be adjusted to the middle of the adjustment range. The cabinet shall be empty and not heated. The measurement shall be made after the steady state has been reached.

The click rate *N* is determined from half the number of switching operations.

NOTE Due to ice deposition on the cooling element, the number of switching operations in normal use is about half that compared with the refrigerator being empty.

7.3.1.10 Washing machines shall be operated with water but without textiles, the temperature of the incoming water shall be in accordance with the manufacturer's instruction for use. The thermostat, if any, must be adjusted to the maximum setting for the programme chosen or to 90 °C, whichever is lower. The most unfavourable control programme of an appliance shall be taken for the determination of click rate *N*.

NOTE For machines where the drying function forms a part of the programme, see 7.3.1.12.

Aqua-stop valves are not an auxiliary apparatus within the meaning of subclauses 5.2.3 and 6.3.

Measurements need not be made on the lead to these valves.

During the measurement of disturbance power on the mains lead, the aquastop hose shall be connected to the water tap and located parallel to the mains lead on a length of 40 cm with a maximum distance of 10 cm. Afterwards the measurements on the mains lead are carried out as described in 6.2.

7.3.1.11 Dish-washing machines as in 7.3.1.10.

7.3.1.12 Tumble-dryers shall be operated with textile material in form of pre-washed, double-hemmed cotton sheets having dimensions of approximately 0,7 m × 0,7 m and a mass between 140 g/m^2 and 175 g/m^2 in dry condition.

Control devices are set to either the lowest or highest position. The position that gives the highest click rate *N* shall be taken.

Separate tumble dryers are operated with half the maximum dry weight of cotton textile material recommended in the manufacturer's instruction for use. [A1⟩The material shall be soaked with water having a temperature of 25 °C ± 5 °C and a mass of 60 % of that of the textile material. ⟨A1]

Tumble dryers combined with washing machines where the washing, spinning and drying operations are performed sequentially in a single container, are operated with half the maximum dry weight of cotton textile material recommended for the tumble dryer sequence operation in the manufacturer's instruction for use, the water content at the start of the dryer operation being that obtained at the end of the spinning operation after the previous washing operation.

7.3.1.13 Centrifugal dryers shall be operated continuously without load.

7.3.1.14 Razors and hair clippers shall be operated continuously without load, according to 7.1.2.

7.3.1.15 Sewing machines

For testing continuous disturbance of the motor, the motor shall be operated continuously at its maximum speed with the sewing gear, but not sewing a material.

For testing switch disturbance or semiconductor control disturbances, see 7.2.3.1 or 7.2.6.1.

7.3.1.16 Electro-mechanical office machines

7.3.1.16.1 Electric typewriters shall be operated continuously.

7.3.1.16.2 Paper shredders

The device shall be tested for continuous disturbances while the device is fed continuously with paper, resulting in continuous operation of the drive (if possible)

The device shall be tested for discontinuous disturbances while the device is fed with one single sheet at the time, allowing the motor to switch off between each sheet.

This process shall be repeated as quickly as possible.

The paper shall be suitable for typewriter or copying machine, and shall have a length between 278 mm and 310 mm independent of the dimensions for which the shredder is designed. The weight category shall be 80 g/m^2.

7.3.1.17 Projectors

7.3.1.17.1 Cine projectors shall be operated continuously with a film, the lamp being switched on.

7.3.1.17.2 Slide projectors shall be operated continuously without slides, the lamp being switched on. To determine the click rate *N*, see 7.2.3.3.

7.3.1.18 Milking machines shall be operated continuously without vacuum.

7.3.1.19 Lawn mowers shall be operated continuously without load.

7.3.1.20 Air conditioning equipment

7.3.1.20.1 If the air temperature is controlled by changing the time interval of operation of the compressor motor used in the appliance, or the appliance has heating device(s) controlled by thermostat(s), measurements shall be made according to the same operating condition as in 7.3.4.14.

7.3.1.20.2 If the appliance is a variable capacity type which has inverter circuit(s) that control(s) the revolution of the fan or compressor motor, measurements shall be made with the temperature controller setting at the lowest position when in cooling mode, and at the highest position when in heating mode.

7.3.1.20.3 The ambient temperature for testing the equipment by 7.3.1.20.1 and 7.3.1.20.2 shall be (15 ± 5) °C when the appliance is operating in heating mode, and (30 ± 5) °C when it is operating in cooling mode. If it is impractical to keep the ambient temperature within this range, another temperature is also permissible, provided that the equipment operates in a stable manner.

The ambient temperature is defined at the temperature of the air flow to the indoor unit.

7.3.1.20.4 If the appliance consists of indoor and outdoor units (split type), the length of connecting refrigerant pipe shall be 5 m ± 0,3 m and the pipe shall be shaped like a coil with a diameter of approximately 1 m. If the pipe length cannot be adjusted, it shall be longer than 4 m, but not longer than 8 m. For the measurement of disturbance power on the connecting leads between the two units, the leads shall be separated from the refrigerant pipe and extended to accommodate the clamp measurement. For all other measurements of disturbance power and disturbance voltage the connecting leads between the two units shall be routed along the refrigerant pipe. Where an earthing conductor is required, but not included in the mains lead, the earthing terminal of the outdoor unit shall be connected to the reference ground (see 5.2.1, 5.2.2 and 5.2.3). The artificial V-network shall be situated at a distance of 0,8 m from the unit (either the indoor or outdoor unit) which is connected to the mains network. Depending on the maximum length of leads , other than the mains lead, the starting frequency for the terminal disturbance voltage measurement on these leads is given by the formula specified in sub-Clause 5.2.3.

NOTE If no specific information about the length of auxiliary leads is given by the manufacturer, it can be assumed that their length is always greater than 2 m but less than 30 m.

7.3.2 Electric tools

7.3.2.1 General

7.3.2.1.1 For motor-operated tools with two rotating directions, measurements shall be made for each direction after operating periods of 15 min for each direction, the highest of the two disturbance levels shall comply with the limit.

7.3.2.1.2 Electric power-operated tools which incorporate vibrating or swinging masses shall be tested with these masses disengaged by a clutch or other mechanical device or electrically disconnected by a switch, if possible. If such disengagement or disconnection is not possible and if according to the manufacturer's instruction the tool shall not be used at no-load, then the vibrating or swinging masses shall be removed and the mains voltage lowered so that the tool operates at its nominal speed.

7.3.2.1.3 For tools designed to operate via a transformer intended to be connected to the mains supply, the following measuring procedure shall be applied:

a) *Terminal voltage: 148,5 kHz to 30 MHz*

If the tool is sold together with a step-up transformer the disturbance shall be assessed by measurements made on the power supply side of the transformer. The power supply lead from the tool to the transformer shall have a length of 0,4 m or, if longer, folded to form a horizontal bundle with a length between 0,3 m and 0,4 m.

If the tool is intended to be used with a transformer, the disturbance shall be assessed by measurements made on the power supply side of the transformer recommended by the manufacturer for use with the tool.

Where a tool is not supplied with a "sample" transformer at the time of the test, it shall be operated at its rated voltage, and the disturbance shall be assessed by measurements made at the tool's power input connections.

b) *Disturbance power: 30 MHz to 300 MHz*

The disturbance shall be assessed by measurements made on the tool's power input connection whilst being supplied at its rated voltage. The tool shall, during measurement, be equipped with a power supply lead with a length suitable for measurements with the absorbing clamp as described in 6.2.4.

7.3.2.2 Handheld (portable) motor-operated tools, as:

Drills, impact drills

Screwdrivers and impact wrenches

Thread-cutting machines

Grinders, disc-type and other sanders and polishers

Saws, knives and shears

Planing machines and hammers

shall be operated continuously without load.

7.3.2.3 Transportable (semi-stationary) motor-operated tools shall be operated similar to the handheld (portable) tools contained in 7.3.2.2.

7.3.2.4 Soldering equipment, soldering guns, soldering irons

a) For equipment with neither a thermostatically or electronically controlled switch, nor a motor, nor a regulating control (i.e. equipment which does not generate disturbances) measurements need not be performed;

b) Equipment with thermostatically or electronically controlled switch shall be operated with the highest possible duty-cycle. If there is a control device for the temperature the click rate *N* shall be determined for a duty cycle of (50 ± 10) % of this control device;

c) For equipment repeatedly operated with a push button switch (e.g. soldering guns) where only disturbance from this mains switch can be observed, the manufacturer's instruction for use (on the rating label) are to be taken in account: duty factor and cycle-duration ascertain the highest possible number of switching operation per time unit.

7.3.2.5 Glue guns shall be operated continuously with a glue stick in working position; if clicks occur, the click rate *N* shall be assessed under steady-state conditions with the gun in stand-by position on the table.

7.3.2.6 Heat gun (blower for removal of paint, blower for plastic welding etc.) shall be operated as described in 7.3.1.7.

7.3.2.7 Power staplers shall be measured with the longest nails or cramps in accordance with the manufacturer's instruction for use, while working on soft wood (e.g. pinewood).

For all power staplers the click rate *N* shall be determined while operating at 6 strokes per minute (independent of product information or manufacturer's instruction for use).

The limits for portable tools smaller than 700 W are valid for power staplers, independent of their rated power consumption.

7.3.2.8 Spray guns shall be operated continuously with the container empty and without accessories.

7.3.2.9 Internal vibrators shall be operated continuously in the centre of a round steel-plate container filled with water, the volume of the water being 50 times the volume of the vibrator.

A1 *Clause deleted* A1

7.3.3 Motor-operated electromedical apparatus

7.3.3.1 Dental drills

For testing continuous disturbance of the motor, the motor shall be operated continuously at its maximum speed with the drilling apparatus, but not drilling a material.

For testing switch disturbance or semiconductor control disturbance see 7.2.3.1 or 7.2.6.1.

7.3.3.2 Saws and knives shall be operated continuously without load.

7.3.3.3 Electrocardiograms and similar recorders shall be operated continuously with a tape or paper.

7.3.3.4 Pumps shall be operated continuously with a liquid.

7.3.4 Electrical heating appliances

Before making measurements the appliances shall reach steady-state conditions. The click rate *N* shall be determined for a duty-cycle of (50 ± 10) % of the control device, unless otherwise specified. If the duty-cycle of (50 ± 10) % cannot be reached, the highest possible duty-cycle shall be applied instead.

7.3.4.1 Hob elements of hobs and heating elements of hotplates, controlled by thermostats or by energy regulators are operated with a duty cycle (50 ± 10) % of the control device. An aluminium pan filled with water is placed on the element. The click rate N is half of the number of switching operations per minute. If a hob or hotplate contains more than one element, the click rate shall be measured and evaluated for each individual element in turn.

7.3.4.2 Cooking pans, table-type roasters, deep-fat fryers shall be operated as in normal use. Unless a minimum oil level is specified the quantity of oil above the highest point of the heating surface shall be:

– about 30 mm for cooking pans,

– about 10 mm table-type roasters,

– about 10 mm for deep-fat fryers.

7.3.4.3 Feed boilers, water boilers, kettles, coffee makers, milk boilers, feeding-bottle heaters, glue pots, sterilizers, wash boilers, shall be operated half-filled with water and without lid. Immersion heaters shall be operated fully submerged. The click rate *N* shall be determined with a medium setting (60 °C) of a variable control device having a range between 20 °C and 100 °C or with the fixed setting of a fixed control device.

7.3.4.4 Instantaneous water heaters shall be operated in usual position of use with the water flow set at half of the maximum flow rate. The click rate *N* shall be determined with the highest setting of any control device fitted.

7.3.4.5 Thermal and non-thermal storage water heaters shall be operated in usual position of use, filled with typical quantity of water; no water to be drawn off during test. The click rate *N* shall be determined with the highest setting of any control device fitted.

7.3.4.6 Steam generators for indirect heating of appliances e.g. used in hotels and open water baths, shall be operated using the typical quantity of water.

7.3.4.7 Warming plates, boiling tables, heating drawers, heating cabinets shall be operated with no load in the heating compartment or on the heating surface.

7.3.4.8 Cooking ovens, grills, waffle irons, waffle grills shall be operated with no load in the heating compartment or on the heating surface, the oven door being closed.

NOTE The microwave function, if any, is covered by CISPR 11.

7.3.4.9 Toasters: if the conditions in 4.2.3.3 "instantaneous switching" are satisfied, no click limit applies.

All other toasters are to be tested according to 7.3.4.9.1 or 7.3.4.9.2 using as normal load slices of white bread about 24 h old (dimensions approximately 10 cm × 9 cm × 1 cm) to produce golden-brown toast.

7.3.4.9.1 Simple toasters are toasters which:

- incorporate a manually operated switch for switching on the heating element at the start of the toasting cycle and which will switch off the heating element automatically at the end of a predetermined period, and
- incorporate *no* automatic control device to regulate the heating element during the toasting operation.

For simple toasters the click rate N shall be determined and the level of disturbance generated assessed as follows:

a) *Determination of click rate N*

Using the normal load the manual control shall be set to give the required result. With the appliance in a warm condition the average "on" time (t_1 seconds) of the heating element shall be determined from three toasting operations. A rest period of 30 s shall be allowed after each "on" time.

The time for a complete toasting cycle is (t_1 + 30) s. Thus the click rate N is:

$$N = 120/(t_1 + 30)\ \text{s}$$

b) Assessment of disturbance level

The click rate N, established as described above shall be used to calculate the click limit L_q using the formula given in 4.2.2.2.

The toaster shall be tested applying the calculated click limit L_q and assessed using the upper quartile method given in 7.4.2.6. The toaster shall be operated for 20 cycles without load at the setting specified in Item a). Each cycle shall comprise an operating period and a rest period, the latter having sufficient duration to ensure that the appliance is cooled to approximately room temperature at the beginning of the next cycle. Forced air cooling may be used.

7.3.4.9.2 Other toasters shall be operated using the normal load. Each cycle shall consist of an operating period and a rest period, the latter having a duration of 30 s. The click rate N shall be determined at a setting at which the bread becomes golden-brown

7.3.4.10 Ironing machines (ironing machines for table use, rotating ironing machines, ironing presses):the click rate $N1$ of the control device shall be determined with the heating surface being in the open position and the control devices at high temperature setting.

The click rate $N2$ of the motor switch shall be determined when two damp hand-towels (approximately 1 m × 0,5 m) are ironed per minute.

For fixing the click limit L_q the sum of the two click rates $N = N1 + N2$ has to be applied and the ironing machine shall be tested applying this limit and assessed using the upper quartile method given in 7.4.2.6 on both the control device and the motor switch.

7.3.4.11 Irons shall be operated with the soleplate cooled using air, water or oil cooling. The click rate N is defined as the product of the factor 0,66 and the number of switching operations per minute for a duty-cycle of (50 ± 10) % of the control device operated at a high temperature setting.

7.3.4.12 Vacuum packagers shall be operated with empty bags once per minute or according to the manufacturer's instruction for use.

7.3.4.13 Flexible electrical heating appliances (warming pads, electric blankets, bedwarmers, heating mattresses) shall be spread between two flexible covers (e.g. non-conducting mats), extending beyond the heating surface by at least 0,1 m. The thickness and the heat conductivity shall be selected in such a way that the click rate *N* can be determined for a duty-cycle of (50 ± 10) % of the control device.

7.3.4.14 Room heaters (fan heaters, convectors, fluid-filled heaters as well as oil and gas burners and similar) shall be operated as in normal use.

The click rate *N* shall be determined for a duty-cycle of (50 ± 10) % of the control device or the maximum operating rate stated by the manufacturer.

The amplitude and duration of the disturbance shall be measured for the lowest position of the power range switch, if any.

For appliances having their thermostats and acceleration resistor connected to the mains, the same measurements shall be performed in addition with the switch in zero position.

When, in practice, the thermostat may be used together with inductive loads (e.g. relay, contactor) all measurements shall be performed using such a device, having the highest coil inductance used in practice.

In order to obtain a satisfactory measurement, it is essential that the contacts shall be operated for a sufficient number of times with a suitable load to ensure that the levels of disturbance are representative of those encountered in normal operation.

NOTE See also 7.2.4 for room heating equipment intended to be used stationary.

A1 **7.3.4.15** Rice cookers shall be tested with the rated capacity of tap water and with the lid closed. If there is no indication of the rated capacity, the cooker shall be filled with 80 % water of the maximum capacity of the inner pot.

If the cooker automatically enters a “keep warm”-mode at the end of the cooking process, the cooking mode should be ended manually and the click measurement shall be started at the time of the first operation of the thermostat, which controls the “keep warm” temperature. A1

7.3.5 Automatic goods-dispensing machines, entertainment machines and similar appliances

As far as continuous disturbance occurs no special operating conditions are to be observed; the appliance is to be operated according to the manufacturer's instruction for use.

In case of automatic machines, where individual switching processes are (directly or indirectly) manually operated, and whereby no more than two clicks per sales, dispensing or similar processes are produced, 4.2.3.1 is applicable.

7.3.5.1 Automatic dispensing machines

Three dispensing operations are to be carried out, each subsequent operation being initiated once the machine has returned to a quiescent rest state. If the number of clicks produced by each of the dispensing operations is the same then the click rate *N* is numerically equal to one-sixth of the number of clicks produced in a single dispensing operation. If the number of clicks varies from operation to operation, a further seven dispensing operations are to be carried out and the click rate *N* shall be determined from at least 40 clicks on the assumption that the rest period between each dispensing operation was such that the 10 operations were uniformly distributed over a period of one hour. The rest period is to be included in the minimum observation time.

7.3.5.2 Juke boxes

An operating cycle is carried out by inserting the largest number of coins with the minimum value necessary to start the machine, followed by the selection and playing of the corresponding number of pieces of music. This operating cycle is to be repeated as often as necessary to produce a minimum of 40 clicks. The click rate *N* is determined as being half the number of clicks per minute.

NOTE Due to the normal frequency of use and combination of coins, the number of clicks is taken as half that during the test observed.

7.3.5.3 Automatic entertaining machines incorporating a winnings-payout mechanism

Electromechanical devices incorporated in the machine for storing and paying out winnings are to be disconnected where possible from the operating system to allow the entertainment function to be operated independently.

The entertainment cycle is initiated by inserting the largest number of coins with the minimum value necessary to start the machine. The entertainment cycle is to be repeated as often as necessary to produce a minimum of 40 clicks. The click rate $N1$ is determined as being half the number of clicks per minute.

NOTE Due to the normal frequency of use and combination of coins, the number of clicks is taken as half that during the test observed.

The average frequency and value of the winnings-payout is to be supplied by the manufacturer. The click rate, $N2$, of the devices for storing and paying-out winnings are assessed by simulation of a win of the average value supplied by the manufacturer rounded off to nearest payout value. The simulation of this win is to be repeated as often as necessary to produce a minimum of 40 clicks. The winnings-payout mechanism click rate, $N2$, is thus determined.

To allow for the frequency of paying-out, the number of entertainment cycles used to determine $N1$ is multiplied by the average frequency of paying-out. This number of paying-outs per entertainment cycle is multiplied by $N2$ to produce an effective winnings paying-out mechanism click rate, $N3$.

The click rate for the machine is the sum of the two click rates, i.e. $N1 + N3$.

7.3.5.4 Automatic entertainment machines with no winnings-payout mechanism

7.3.5.4.1 Pinball machines

The machine shall be operated by a reasonable player (one with at least 30 min experience of operating this or similar machines). The largest number of coins with the minimum value necessary to start the machine are used. The operating cycle is to be repeated as often as necessary to produce a minimum of 40 clicks.

7.3.5.4.2 Video machines and all other similar appliances

These machines and appliances shall be operated in accordance with the manufacturer's instruction for use. The operating cycle shall be the programme obtained after inserting the largest number of coins with the minimum value necessary to start the machine. In the case of machines with several programmes, the programme giving the maximum click rate shall be selected. Should the duration of the programme be less than 1 min, the following programme is not to be started within one minute off the start of the previous programme so as to reflect normal use. This rest period is to be included in the minimum observation time. The programme shall be repeated as often as necessary to produce a minimum of 40 clicks.

NOTE This subclause will be deleted when provisions for video machines and similar appliances are taken into account in CISPR 13.

7.3.6 Electric and electronic toys

7.3.6.1 Classification

For the purposes of this standard, toys are subdivided into categories.

For each category specific requirements are given.

Category A: battery toys without electronic circuits or motors.

NOTE Examples are electric torches for children.

Toys of category A are considered to comply with the requirements without testing.

Category B: battery toys with built-in batteries, without possibility for external electric connection.

NOTE Examples are musical soft toys, educational computers, motorised toys.

Toys of category B shall comply with the limits given in:

– [A1] 4.1.2.2 [A1](radiated disturbances).

Category C: battery toys having associated units which are, or can be, connected by means of an electric cord.

NOTE 1 Examples are cord-controlled toys and telephone sets.

NOTE 2 Examples of associated units are battery boxes, control units and headphones.

Toys of category C shall comply with the limits [A1] from 30 MHz to 1 000 MHz. [A1]

Category D: transformer toys and dual supply toys incorporating no electronic circuits.

NOTE Examples are toys with motors or with heating elements such as electric potter's wheels and track sets without electronic controls.

Toys of category D shall comply with the limits given in:

– 4.1.1 (terminal voltages);
– ⟦A1⟩ 4.1.2.1 (disturbance power) and 4.1.2.2 (radiated disturbances) ⟨A1⟧
– 4.2 (discontinuous disturbance).

Category E: transformer toys and dual supply toys incorporating electronic circuits and all other toys which are not covered by the other categories and are within the scope of this standard.

NOTE Examples are educational computers, electric organs and chess sets and track sets with electronic control units.

Toys of category E shall comply with the limits given in:

– 4.1.1 (terminal voltage);
– ⟦A1⟩ 4.1.2.2 ⟨A1⟧ (radiated disturbances);
– 4.2 (discontinuous disturbance).

For toys running on tracks, disturbance power measurements according to 4.1.2 may be used as an alternative to radiated disturbance measurement.

7.3.6.2 Application of tests

7.3.6.2.1 Measurement of terminal disturbance voltages

Terminal disturbance voltage measurements shall be carried out only at the mains side of the transformer, by means of the artificial mains network (see 5.1.2).

Terminal voltage measurement by means of a voltage probe (see 5.1.3) shall be carried out only at terminals connected to load and control cables longer than 2 m.

7.3.6.2.2 Disturbance power measurements

The test is not applicable to interconnecting cables shorter than 60 cm.

7.3.6.2.3 Radiated disturbance measurements

Measurements shall be carried out in a representative cable lay-out, which shall be recorded in the test report.

The test is not applicable to toys which incorporate neither a motor, nor an electronic circuit with a clock frequency lower than 1 MHz.

7.3.6.3 Operating conditions

During the tests, toys are operated under normal operation. Transformer toys are tested with the transformer supplied with the toy. If the toy is supplied without a transformer, it shall be tested with an appropriate transformer.

Dual supply toys having a clock frequency greater than 1 MHz are tested with the inserted batteries, when they are supplied by a transformer for toys.

In case of associated devices (for example, video toy cartridges) separately sold to be used with different appliances, the associated device shall be tested with at least one appropriate representative hosting appliance, selected by the manufacturer of the associated device, in order to check conformity of the associated device for all appliances with which it is intended to operate. The hosting appliance is to be representative of series produced appliances and shall be typical.

7.3.6.3.1 Electric toys running on tracks

An electric toy running on tracks includes the moving element, the control device and the track sold in one package.

For the test, the toy shall be assembled in accordance with the instructions accompanying it. The layout of the track shall be that having the largest area. Other components shall be arranged as shown in Figure 7.

Each moving element shall be tested separately while running on the track. All moving elements which are in the package shall be tested and the toy shall also be tested with all moving elements operating simultaneously. All self-propelled vehicles contained in the toy shall operate simultaneously but the other vehicles shall not be on the track. The toy is tested in the most unfavourable configuration, these conditions being assessed for each test.

If toys running on tracks have identical moving components, control devices and track and differ only by the numbers of moving elements, the tests are only carried out on the toy which contains the greatest number of moving elements in one package. If this toy complies with the requirements, the other toys are considered as complying with the requirements without being further tested.

Individual components of a toy which have been found to comply with the requirements as part of a toy, do not require further testing even when sold separately.

Individual moving elements, not already approved as part of a toy, shall be tested on an oval track having dimensions 2 m × 1 m. The track, cords and control device shall be supplied by the manufacturer of the individual moving element. If such accessories are not supplied, the tests shall be carried out with accessories considered as appropriate by the testing organisation.

7.3.6.3.2 Experimental kits

A few set-ups of the experiments which are specified by the manufacturer for the normal intended use are subjected to EMC tests. The selection is made by the manufacturer, but from those with the highest interference potential.

7.3.7 Miscellaneous equipment and appliances

A1 NOTE Limits in the frequency range 30 MHz to 1 000 MHz are not applicable to the devices quoted in 7.3.7.1 to 7.3.7.3, causing only discontinuous disturbance (see 4.2.1). A1

7.3.7.1 Time switches not incorporated in equipment or appliances

The switch is adjusted to maximize the value of n_2 (the number of switching operations – see 7.4.2.3). The load current shall be 0,1 of the maximum rated value, and unless otherwise specified by the manufacturer, the load shall consist of incandescent lamps.

If the conditions in 4.2.3.3 "instantaneous switching" are satisfied, there is no limit on the amplitudes of the clicks produced.

For switches employing a manually operated "on" and automatic "off", the average "on" time (t_1 seconds) shall be determined from three successive operations while the switch is adjusted to maximize the value of n_2. A rest period of 30 s shall be allowed. The time for a complete cycle is (t_1 + 30) s, thus the click rate $N = 120/(t_1 + 30)$.

7.3.7.2 Electric fence supply units

When measuring the disturbance voltage at the fence terminals of the electric fence energizer, the fence wire shall be simulated by a series RC circuit comprising a 10 nF capacitor (surge voltage at least equal to the no-load output voltage of the electric fence energizer) and a 250 Ω resistor (the 50 Ω in parallel with 50 μH incorporated in the artificial mains V-network provides the balance of the required 300 Ω load resistance) connected as shown in Figure 6.

The limits for electric fence supply units apply to the mains terminals and to the output terminal of the supply unit. A correction factor of 16 dB shall be added to the measured values on the output terminals according to the voltage division resulting from the use of the fence equivalent circuit from the 250 Ω resistor in series with the 50 Ω impedance of the artificial mains V-network (see also item 5 of the legend of Figure 6).

The leakage resistance of the fence wire is represented by a resistor of 500 Ω placed in parallel to the series circuit.

When measuring, the appliance shall be operated in the normal position with a maximum inclination of 15° from the vertical position.

The controls accessible without tools shall be set to the position of maximum disturbance.

Electric fence energizers designed to be operated with a.c. or d.c. shall be tested with both kinds of supply.

The earth terminal of the fence circuit shall be connected to the earth terminal of the artificial mains V-network. If the terminals of the fence circuit are not clearly marked, they shall be earthed in turn.

NOTE In order to avoid damage to the r.f. input of the measuring receiver by the high energy pulses of the electric fence unit, it may be necessary to insert an attenuator before the r.f. input.

7.3.7.3 Electronic gas igniters

The disturbance caused by manually operated single spark on demand electronic gas igniters, which operate only when a switch included for the purpose of mains connection or disconnection operates, is to be disregarded according to 4.2.3.1 (for instance central heating boilers and gas fires are excluded, but not cooking equipment).

Other equipment incorporating electronic gas igniters shall be tested without gas being applied to the equipment as follows:

7.3.7.3.1 Single spark on demand igniters

Determine whether disturbance is continuous or discontinuous as follows:

Produce 10 single sparks with not less than 2 s between sparks. If any click exceeds 200 ms, the continuous disturbance limits of tables 1 and 2 apply. When the conditions of the click duration in 4.2.3.3 "instantaneous switching" are fulfilled, it is assumed that the click rate is not more than five and there is no limit on the amplitude of the click produced.

Otherwise, the click limit L_q shall be collated as in 4.2.2.2 using an empirical click rate N = 2. This click rate is an assumed practical value, which gives a click limit L_q 24 dB above the continuous disturbance limit L.

The igniter shall be tested for 40 sparks with a minimum of 2 s between each spark, applying the calculated click limit L_q and assessed by the upper quartile method (see 7.4.2.6).

7.3.7.3.2 Repetitive igniters

Determine whether the disturbance is continuous or discontinuous as follows:

Operate the igniter to produce 10 sparks.

If either,

a) any disturbance exceeds 200 ms, or
b) any disturbance is not separated from a subsequent disturbance or click by at least 200 ms, the continuous disturbance limit of tables 1 and 2 applies.

When measuring continuous disturbances the igniter appliance shall be switched on during the whole test. A resistive load of 2 kΩ shall be placed across the discharge path.

If

all clicks are less than 10 ms, it is assumed that the click rate N is not more than five and in accordance with 4.2.3.3, there is no limit on the amplitude of the clicks produced.

NOTE If one of the 10 clicks has a duration more than 10 ms but less than 20 ms for the application of the exception in 4.2.3.3, the duration of at least 40 clicks has to be evaluated.

If

the exception in 4.2.3.3 cannot be applied, the click limit L_q shall be calculated as in 4.2.2.2 using an empirical rate N = 2. This click rate is an assumed practical value which gives a click limit L_q of 24 dB above the continuous disturbance limit L.

The igniter shall be tested for 40 sparks applying the calculated click limit L_q and assessed by the upper quartile method (see 7.4.2.6).

7.3.7.4 Insect killers: A resistive load of 2 kΩ shall be placed across the discharge path

NOTE Normally only continuous disturbance can be observed.

7.3.7.5 Radiating equipment for personal care as appliances incorporating gas-discharge lamps, e.g. for therapeutic purposes, like ultra-violet and ozone lamps, see CISPR 15.

7.3.7.6 Electrostatic air cleaners shall be operated under normal working conditions, surrounded by a sufficient volume of air.

7.3.7.7 Battery chargers

Battery chargers not incorporated in another appliance or equipment shall be measured in a manner similar to 5.2.4 with the mains supply terminals connected to an artificial mains V-network.

The load terminals shall be connected to a variable resistive load designed to ensure that the maximum specified current and/or voltage of the device under test can be obtained. See also 4.1.1.2. In cases when the load terminals are not accessible while loading, no measurement at the load terminals need to be made.

When a fully charged battery is required for correct operation of the device, the battery shall be connected in parallel with the variable load.

Battery chargers which would not operate as intended when connected to a resistive load or a fully charged battery shall be tested after being connected to a battery which is partially charged.

The load shall be varied until the maximum and minimum values of the voltage or current to be controlled have been reached; the maximum level of disturbance at the input and at the load terminals shall be recorded.

NOTE The terminals to be connected to the battery are considered as additional terminals; the limits of Table 1, columns 4 and 5 apply.

7.3.7.8 Rectifiers

Rectifiers not incorporated in another appliance or equipment shall be measured in a manner similar to 5.2.4 with the mains supply terminals connected to an artificial mains V-network and the load terminals to a variable resistive load designed to ensure that the maximum specified current and/or voltage of the device under test can be attained.

The load shall be varied until the maximum and minimum values of the voltage or current to be controlled have been reached; the maximum level of disturbance at the input and at the load terminals shall be recorded.

7.3.7.9 Converters

Converters not incorporated in appliances or equipment that can be connected to the mains supply shall be measured in a manner similar to 5.2.4 with the mains supply terminals connected to an artificial mains V-network and the load terminals to a variable load. Unless specified otherwise by the manufacturer, a resistive load shall be applied.

The load shall be varied until the maximum and minimum values of the voltage or current to be controlled have been reached; the maximum level of disturbance at the input and at the load terminals shall be recorded.

In the case of battery-operated converters, the supply terminals have to be connected directly to the battery and the disturbance voltage at the battery side is measured as specified in 7.2.2 by means of the voltage probe as described in 5.1.3, limits given in 4.1.1.4, last paragraph.

7.3.7.10 Lifting devices (electric hoists)

To be operated in intermittent action without load.

The click rate *N* shall be determined with 18 working cycles per hour; each cycle shall comprise:

a) on hoists having only operating speed: lift; pause; lower; pause;

b) on hoists having two operating speeds with both the following cycles, alternating:

   Cycle 1: fine lift (creep speed); lift (full speed); fine lift; pause; fine lower; lower (full speed); fine lower; pause;

   Cycle 2: fine lift; pause; fine lower; pause.

NOTE For shortening the time to be used for testing the cycles may be accelerated, but the click rate is calculated on the basis of 18 cycles per hour; care should be taken not to damage the motor by exceeding duty cycle.

For any traction drive a similar test shall be made.

Lifting and traction shall be measured and evaluated separately.

7.4 Interpretation of results

7.4.1 Continuous disturbance

7.4.1.1 The reading on the measuring receiver is observed for about 15 s for each measurement; the highest readings shall be recorded with the exception of any isolated spike which shall be ignored.

7.4.1.2 If the general level of the disturbance is not steady, but shows a continuing rise or fall of more than 2 dB in the 15 s period, then the disturbance measurement shall be performed in accordance with the conditions of normal use of the appliances, as follows:

a) If the appliance is one which may be switched on or off frequently, for instance an electric drill or a sewing-machine motor, then at each frequency of measurement the appliance shall be switched on just before each measurement, and switched off just after each measurement; the maximum level obtained during the first minute at each frequency of measurement shall be recorded;

b) if the appliance is one which in use normally runs for longer periods, for instance a hair-dryer, then it shall remain switched on for the period of the complete measurement, and at each frequency the level of disturbance shall be recorded only after a steady reading (subject to the provision of 7.4.1.1) has been obtained.

7.4.1.3 The disturbance voltage limits apply throughout the frequency range 148,5 kHz to 30 MHz and therefore the disturbance characteristics shall be assessed throughout this frequency range.

An initial survey or scanning of the complete range shall be made. In the case of quasi-peak detector measurement, the registered values shall be given at least at the following frequencies and at all frequencies at which there is a maximum:

160 kHz, 240 kHz, 550 kHz, 1 MHz, 1,4 MHz, 2 MHz, 3,5 MHz, 6 MHz, 10 MHz, 22 MHz, 30 MHz.

These frequencies are to be subject to a tolerance of ±10 %.

7.4.1.4 The disturbance power limits apply throughout the frequency range 30 MHz to 300 MHz and therefore the disturbance characteristics shall be assessed throughout this frequency range.

An initial survey or scanning of the complete range shall be made. In the case of quasi-peak detector measurement, the registered values shall be given at least at the following frequencies and at all frequencies at which there is a maximum:

30 MHz, 45 MHz, 65 MHz, 90 MHz, 150 MHz, 180 MHz, 220 MHz, 300 MHz.

These frequencies are to be subject to a tolerance of ±5 MHz.

7.4.1.5 If in the frequency range 30 MHz to 300 MHz measurements are made on a single appliance, the measurements are to be repeated on at least one frequency in the vicinity of each of the following frequencies:

45 MHz, 90 MHz, 220 MHz.

If the observed differences between the levels for the respective frequencies during the first and second measurement are 2 dB or less, the first results are retained. If these differences are greater than 2 dB, the measurements of the complete spectrum shall be repeated and the highest level of all measurements at each frequency shall be taken.

NOTE Further restriction to the relevant critical frequency is permitted for tests on running production.

[A1]**7.4.1.6** The radiated emission limits apply throughout the frequency range from 30 MHz to 1 000 MHz. [A1]

[A1]**7.4.1.7**[A1] In the case of average detector measurement on disturbances caused by electronic devices, such as microprocessors, isolated spectral lines may occur, constituted by the fundamental frequency and higher harmonics of the disturbance source.

The values registered with the average detector shall be given at least at all isolated spectral lines.

[A1]**7.4.1.8**[A1] When an equipment contains only a commutator motor as source of disturbance, average detector measurement need not be carried out.

7.4.2 Discontinuous disturbance

7.4.2.1 The minimum observation time *T* is obtained at both measuring frequencies (see 7.4.2.2) in the following way:

For appliances which do not stop automatically, the shorter time of either:

1) the time to register 40 clicks, or, where relevant, 40 switching operations, or
2) 120 min.

For appliances which stop automatically, the duration of the minimum number of complete programmes necessary to produce 40 clicks or, where relevant, 40 switching operations. When, 120 min after the beginning of the test, 40 clicks have not been produced, the test is stopped at the end of the programme in progress.

The interval between the end of one programme and the start of the next programme shall be excluded from the minimum observation time, except for those appliances for which an immediate re-start is inhibited. For these appliances, the minimum time required to re-start the programme shall be included in the minimum observation time.

7.4.2.2 The click rate *N* shall be determined under the operating conditions specified in 7.2 and 7.3 or, when not specified, under the most onerous conditions of typical use (maximum click rate) at 150 kHz for the frequency range 148,5 kHz to 500 kHz and at 500 kHz for the frequency range 500 kHz to 30 MHz.

The receiver attenuator is to be set such that an input signal equal in amplitude to the relevant limit *L* for continuous disturbance produces a mid-scale deflection on the meter.

NOTE See Clause 10 of CISPR 16-1-1 for more details.

In the case of instantaneous switching (see 4.2.3.3), the pulse duration shall only be determined at 500 kHz.

7.4.2.3 The click rate *N* is obtained in the following way:

In general *N* is the number of clicks per minute determined from the formula $N = n_1/T$, n_1 is the number of clicks during the observation time *T* minutes.

For certain appliances (see Annex A) the click rate *N* is determined from the formula $N = n_2 \times f/T$ where n_2 is the number of switching operations (see 3.3) during the observation time *T* and *f* is a factor given in Annex A, Table A.2.

7.4.2.4 The relevant click limit L_q for discontinuous disturbance is determined in accordance with the formula given in 4.2.2.2.

7.4.2.5 The measurement of disturbance generated by switching operations shall be performed with the same programme as has been chosen when determining the click rate *N* at the following restricted number of frequencies:

150 kHz, 500 kHz, 1,4 MHz and 30 MHz.

7.4.2.6 The appliance is assessed for compliance with the higher limit L_q in accordance with the upper quartile method, the appliance being tested for a time not less than the minimum observation time *T*.

If the click rate *N* is determined from the number of clicks, the appliance under test shall be deemed to comply with the limit if not more than a quarter of the number of clicks registered during the observation time *T* exceeds the click limit L_q.

If the click rate *N* is determined from the number of switching operations, the appliance under test shall be deemed to comply with the limit if not more than a quarter of the number of switching operations registered during the observation time *T* produce clicks exceeding the click limit L_q.

NOTE 1 An example of the use of the upper quartile method is given in Annex B.

NOTE 2 See Annex C for guidance on the measurement of discontinuous disturbance.

8 Interpretation of CISPR radio disturbance limit

8.1 Significance of a CISPR limit

8.1.1 A CISPR limit is a limit which is recommended to national authorities for incorporation in national standards, relevant legal regulations and official specifications. It is also recommended that international organizations use these limits.

8.1.2 The significance of the limits for type approved appliances shall be that on a statistical basis at least 80 % of the mass-produced appliances comply with the limits with at least 80 % confidence.

In the case of discontinuous disturbance when the shortened procedure described in 8.2.2.3 is applied, compliance with the limits on the 80 % – 80 % basis is not guaranteed.

8.2 Type tests

Type tests shall be made:

8.2.1 For appliances producing continuous disturbance:

8.2.1.1 Either on a sample of appliances of the type using the statistical method of evaluation in accordance with 8.3.

8.2.1.2 Or, for simplicity's sake, on one appliance only (see 8.2.1.3).

8.2.1.3 Subsequent tests are necessary from time to time on appliances taken at random from the production, especially in the case indicated in 8.2.1.2.

8.2.2 For appliances producing discontinuous disturbance:

8.2.2.1 On one item only.

8.2.2.2 Subsequent tests are necessary from time to time on an appliance taken at random from the production.

8.2.2.3 In the case of controversy with regard to a type approval test, the following shortened procedure is applied:

If the first appliance is measured and fails, three additional appliances shall be measured at the same frequency or frequencies at which the first appliance failed.

The three additional appliances are judged according to the same requirements as applied to the first appliance.

If all three additional appliances comply with the relevant requirements, the type is approved.

If one or more additional appliances do not comply, the type is rejected.

8.3 Compliance with limits for appliances in large-scale production

A1 Statistically assessed compliance with the limits shall be made according to one of the three tests described below or to some other test which ensures compliance with the requirements of 8.1.2 above.

The test according to 8.3.1 or 8.3.2 should be performed on a sample of not less than 5 items of the type, but if, in exceptional circumstances, 5 items are not available, then a sample of 3 or 4 shall be used.

The test according to 8.3.3 should be performed on a sample of not less than 7 items.

NOTE It is recommended to start the evaluation with the method described in 8.3.1 and only in case the test has not been passed to continue with the more extensive methods described in 8.3.2 and 8.3.3.

8.3.1 Test based on a general margin to the limit

Compliance is given when the measured values from all items of the sample are under the limit and the margin to the limit is not shorter than the general margin, given in Table 4 below.

Table 4 – General margin to the limit for statistical evaluation

Sample size (n)	3	4	5	6
General margin to the limit (dB)	3,8	2,5	1,5	0,7

This method shall not be used to consider a product as non-compliant.

NOTE The newly introduced method in this subclause is based on CISPR 16-4-3.

Compliance is given, when

$$x_{max} + k_E \, \sigma_{max} < L$$

where

x_{max} is the highest (worse) value of all items in the sample;

k_E is the coefficient from the Table below, depending on the sample size;

σ_{max} is a conservative value for the standard deviation in a product group;

L is the limit.

Sample size (n)	3	4	5	6
Coefficient k_E	0,63	0,41	0,24	0,12

A1

A1 CISPR 16-4-3 recommends a value σ_{max} = 6,0 dB for both the terminal voltage and the disturbance power. For radiated disturbances, measured on appliances in the scope of this standard, the same value for σ_{max} has been assumed. The values for the general margin to the limit in the Table 4 above are a simple multiplication of this 6,0 dB with the coefficient k_E. In Table 4 values are given only for a sample size up to n = 6 because for n = 7 or higher the method given in 8.3.3 can be applied, where the binomial distribution without an additional margin is used.

8.3.2 Test based on the non-central *t*-distribution

Compliance is judged from the following relationship:

$$\bar{x} + kS_n \leq 0$$

where

$\bar{x}$ is the arithmetic mean of the values x_n of n items in the sample;

k is the factor, derived from tables of the non-central t-distribution which ensures with 80 % confidence that 80 % or more of the type is below the limit;

the value of k depends on the sample size n and is stated in Table 5 below.

Table 5 – Factor *k* for the application of the non-central *t*-distribution

n	3	4	5	6	7	8	9	10	11	12
k	2,04	1,69	1,52	1,42	1,35	1,3	1,27	1,24	1,21	1,2

where

S_n^2 is equals to $\Sigma(x_n - \bar{x})^2 / (n - 1)$;

S_n is the standard deviation of the sample;

x_n is determined as follows: for each of the defined frequency ranges, the differences between the measured values and the limit are defined. The difference is negative where the measured value is below the limit and positive where it is higher than the limit. For the nth individual sample, x_n is the difference value at the frequency where the difference curve shows its maximum.

NOTE If all measured values are below the limit, x_n = the shortest distance to the limit. If some of the measured values are above the limit, x_n = highest value by which the limit is exceeded.

The statistical evaluation shall be carried out separately for the following frequency ranges:

Terminal voltage:
a) 150 kHz - 500 kHz
b) 500 kHz - 5 MHz
c) 5 MHz - 30 MHz

Disturbance power:
a) 30 MHz - 100 MHz
b) 100 MHz - 200 MHz
c) 200 MHz - 300 MHz

Radiated disturbances:
a) 30 MHz - 230 MHz
b) 230 MHz - 500 MHz
c) 500 MHz - 1 000 MHz

The quantities x_n, $\bar{x}$, and S_n are expressed logarithmically (dB(µV) or dB(pW) or dB(µV/m)). A1

A1 If all measured values are under the limit and the test is failed only due to a high standard deviation, it shall be investigated whether this high standard deviation has been unjustifiably caused by a maximum of x_n at the borderline between two frequency subranges. In this case the evaluation has to be done according to 8.3.3.

NOTE The figure at the end of this note illustrates the possible difficulties if a maximum of the measured disturbances occurs near the borderline between two frequency sub-ranges. "*U*" is the measured disturbance voltage; "*f*" is the frequency. Here two units with different characteristics out of a sample are shown. For broadband disturbances the value of the maximum as well as the frequency of the maximum can change from unit to unit, differences as between unit 1 and unit 2 in a sample are typical. An average value and standard deviation is calculated for all units (of which two are shown) for each subrange. In this example the calculated standard deviation is much higher for subrange 1 than subrange 2 (e.g. consider how different the values of x_1 and x_2 are at the borderline). Even though the average for subrange 1 is much lower than subrange 2, after taking into consideration the high value of S_n multiplied by the factor out of Table 5, in rare cases this could lead to the sample set failing the given criteria. Since this is simply a consequence of the way in which the frequency sub-ranges have been defined, no statistically meaningful conclusion can be drawn regarding compliance.

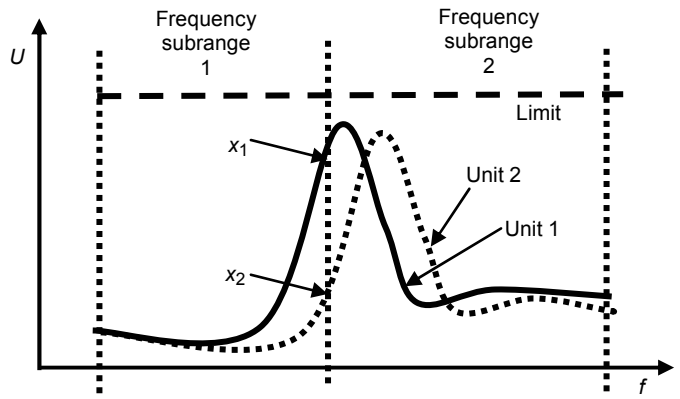

IEC 1904/08

8.3.3 Test based on the binomial distribution

Compliance is judged from the condition that the number of appliances with an interference level above the appropriate limit may not exceed *c* in a sample of size *n*, see Table 6.

Table 6 – Application of the binomial distribution

n	7	14	20	26	32
c	0	1	2	3	4

8.3.4 Larger sample size

Should the test on the sample result in non-compliance with the requirements, then a second sample may be tested and the result combined with those from the first sample and compliance checked for the larger sample size.

NOTE For general information see CISPR 16-4-3.

8.4 Non-compliance

A type shall be considered non-compliant with the requirements of this standard only when an evaluation has been completed using the statistical assessment procedure described in A1

A1 – 8.2.2.3 for discontinuous disturbances and
– 8.3 for continuous disturbances.

9 Methods of measurement of radiated emission (30 MHz to 1 000 MHz)

9.1 Measuring devices

Receivers with quasi-peak detectors shall be in accordance with Clause 4 of CISPR 16-1-1.

9.2 Measuring arrangement

All measuring arrangements shall be in accordance with the requirements of the applied testing method and the referenced measurement standard in Table 3.

10 Measurement uncertainty

The results of measurements of emission from household appliances, electric tools and similar apparatus shall reference the measurement instrumentation uncertainty considerations contained in CISPR 16-4-2.

Determining compliance with the limits in this standard shall be based on the results of the compliance measurement, not taking into account measurement instrumentation uncertainty.

However, the measurement uncertainty of the measurement instrumentation and its associated connections between the various instruments in the measurement chain shall be calculated and both the measurement results and the calculated uncertainty shall appear in the test report. A1

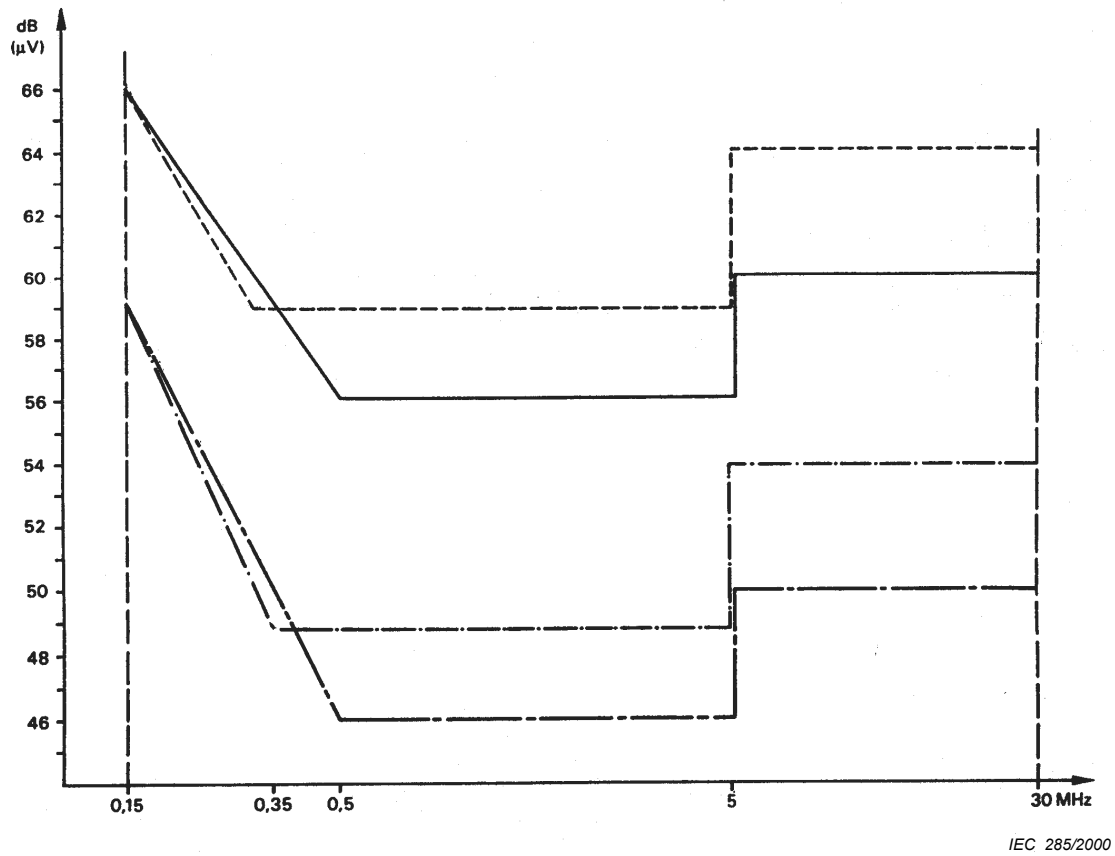

NOTE For electric tools: 700 W to 1 000 W: +4 dB

>1 000 W: +10 dB

Key

- - - - - Electric tools (<700 W) – Quasi peak

——— Household appliances, etc – Quasi peak

- · - · - · Electric tools (<700 W) – Average

— · — · Household appliances, etc – Average

Figure 1 – Graphical representation of the limits, household appliances and electric tools (see 4.1.1)

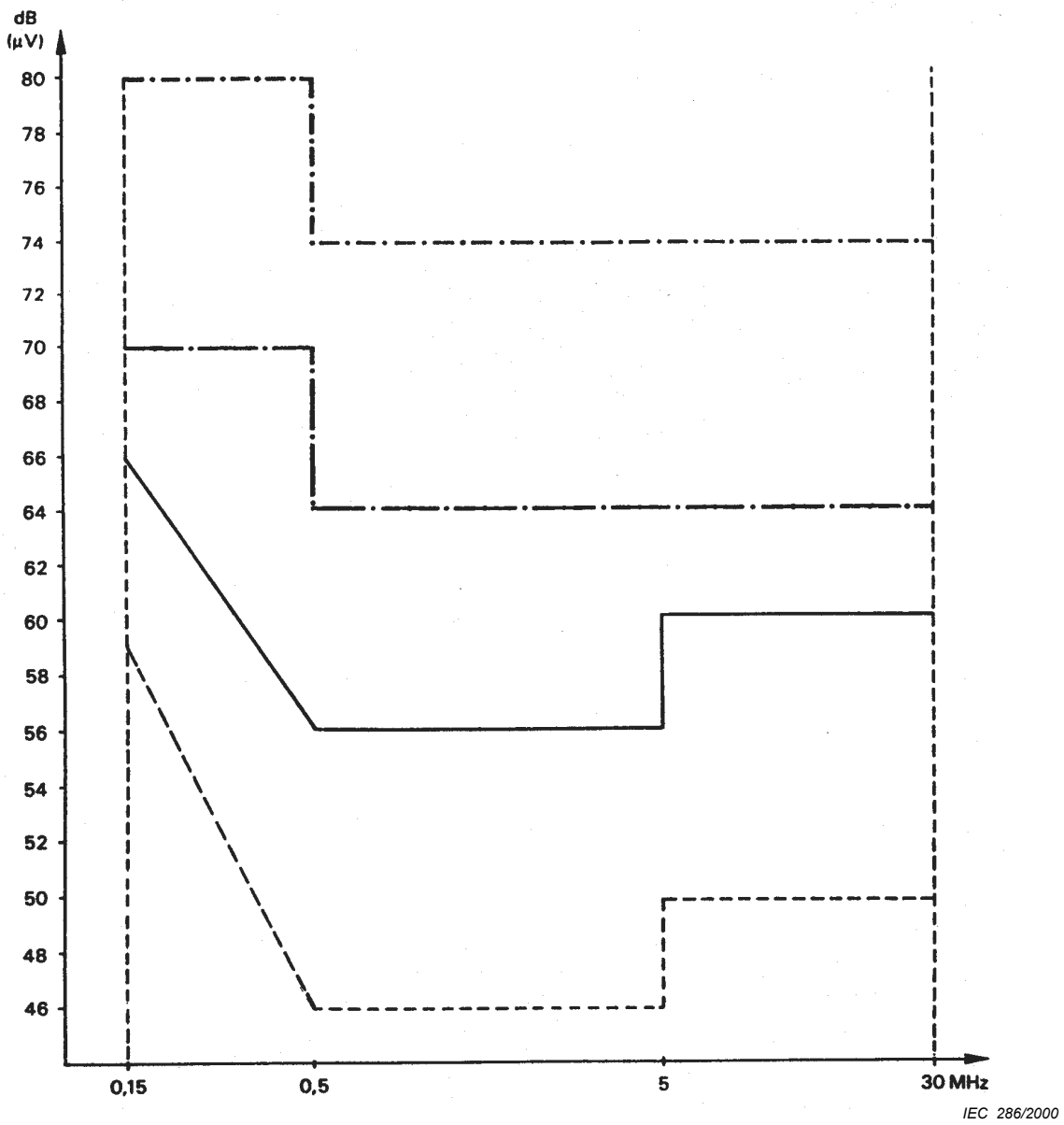

Key

- · - · - ·	At load terminals and at additional terminals – Quasi peak
— · — ·	At load terminals and at additional terminals – Average
———	At mains terminals – Quasi peak
- - - - -	At mains terminals – Average

Figure 2 – Graphical representation of the limits, regulating controls (see 4.1.1)

Figure 3a

One click

Disturbance not longer than 200 ms, consisting of a continuous series of impulses and observed at the intermediate frequency output of the measuring receiver.

Figure 3b

One click

Individual impulses shorter than 200 ms, spaced closer than 200 ms not continuing for more than 200 ms and observed at the intermediate frequency output of the measuring receiver.

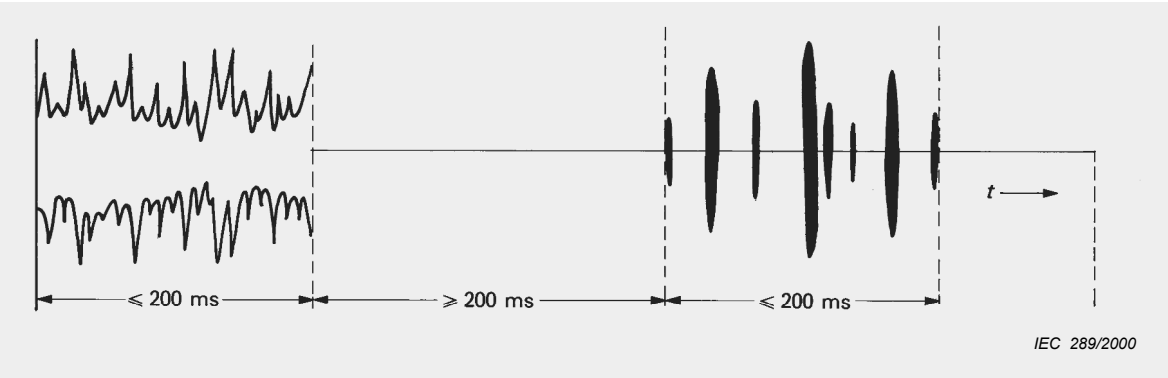

Figure 3c

Two clicks

Two disturbances neither exceeding 200 ms, spaced by a minimum of 200 ms and observed at the intermediate frequency output of the measuring receiver.

Figure 3 – Examples of discontinuous disturbances classified as clicks (see 3.2)

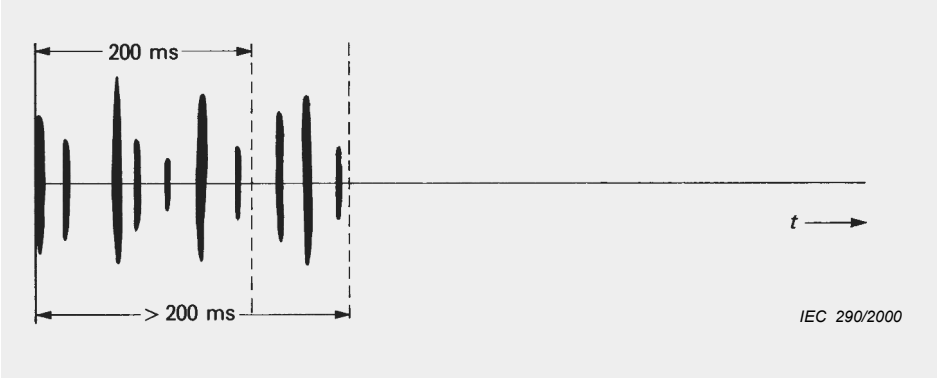

Figure 4a

Individual impulses shorter than 200 ms, spaced closer than 200 ms continuing for more than 200 ms and observed at the intermediate frequency output of the measuring receiver.

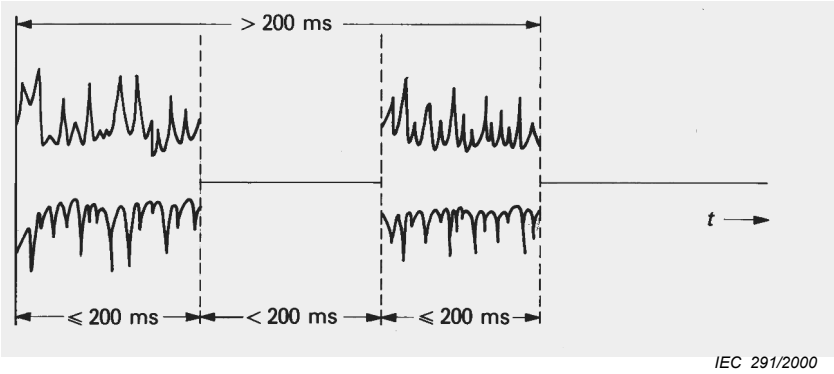

Figure 4b

Two disturbances spaced by less than 200 ms, and having a total duration of more than 200 ms and observed at the intermediate frequency output of the measurement receiver.

Figure 4 – Examples of discontinuous disturbance for which the limits of continuous disturbance apply (see 4.2.2.1).
For some exceptions from this rule see 4.2.3.2 and 4.2.3.4.

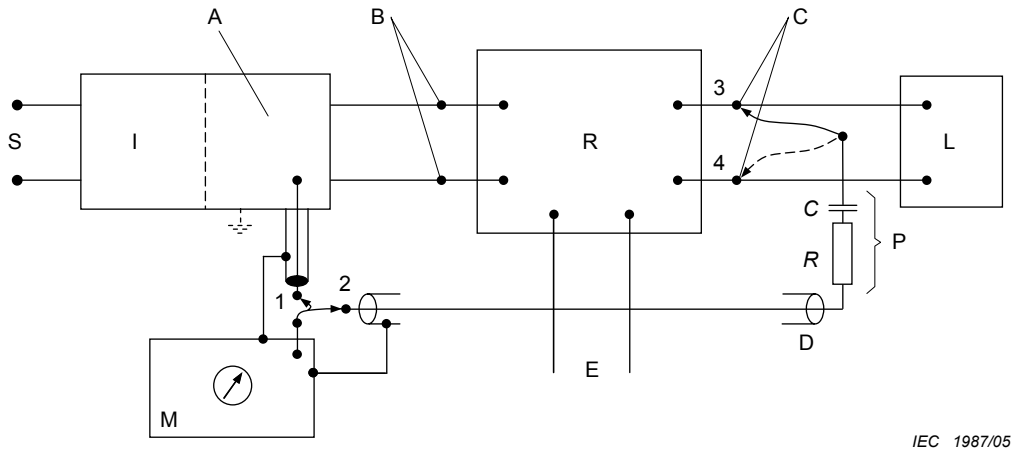

Key

1 Switch position for mains measurements

2 Switch position for load measurements

3 and 4 Successive connections during load measurements

A Artificial mains V-network 50 Ω/50 μH

B Mains terminals

C Load terminals

D Coaxial cable

E To remote component

I Isolating unit

L Load

M Measuring receiver

P Probe: C ≥ 0,005 μF, R ≥ 1500 Ω

R Regulating control

S Supply voltage

NOTE 1 The length of the coaxial cable of the probe shall not exceed 2 m.

NOTE 2 When the switch is in position 2, the output of the artificial mains V-network at terminal 1 shall be terminated by an impedance equivalent to that of the CISPR measuring receiver.

NOTE 3 Where a two-terminal regulation control is inserted in one lead only of the supply, measurements shall be made by connecting the second supply lead as indicated in Figure 5b.

Figure 5a – Measurement arrangement for four-terminal regulating controls

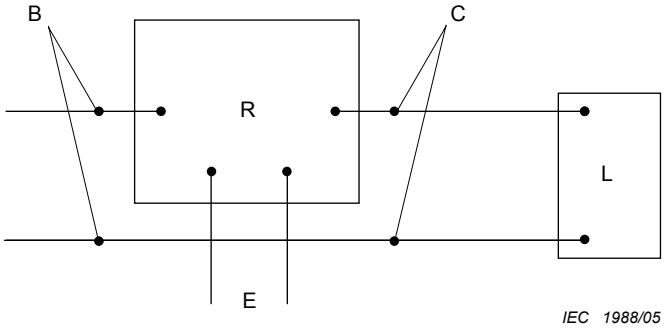

Key

B	Mains terminals
C	Load terminals
E	To remote component
L	Load
R	Regulating control

Figure 5b – Measurement arrangement for two-terminal regulating controls

Figure 5 – Measuring arrangement for regulating controls (see 5.2.4)

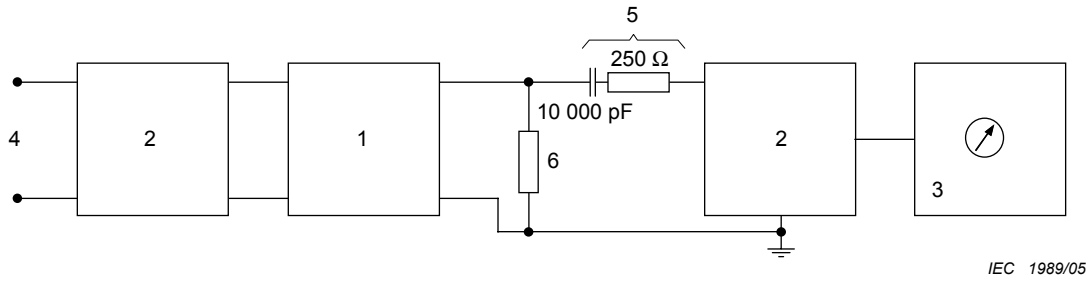

Key

1 Supply unit of electric fence

2 Artificial mains V-network (see 5.1.2)

3 CISPR receiver conforming to CISPR 16-1-1

4 Mains lead, or battery lead

5 Elements of the equivalent circuit to replace the fence (the specified load resistance of 300 Ω is provided by the 250 Ω resistor in series with the 50 Ω impedance of the artificial mains V-network)

6 Resistor of 500 Ω to simulate leakage (to be added to the equivalent circuit of item 5)

NOTE The left V-network is not necessary when the EUT is battery-operated. The right V-network may protect the meter against pulses in the dummy fences.

Figure 6 – Arrangement for measurement of disturbance voltage produced at the fence terminal of electric fence energizers (see 7.3.7.2)

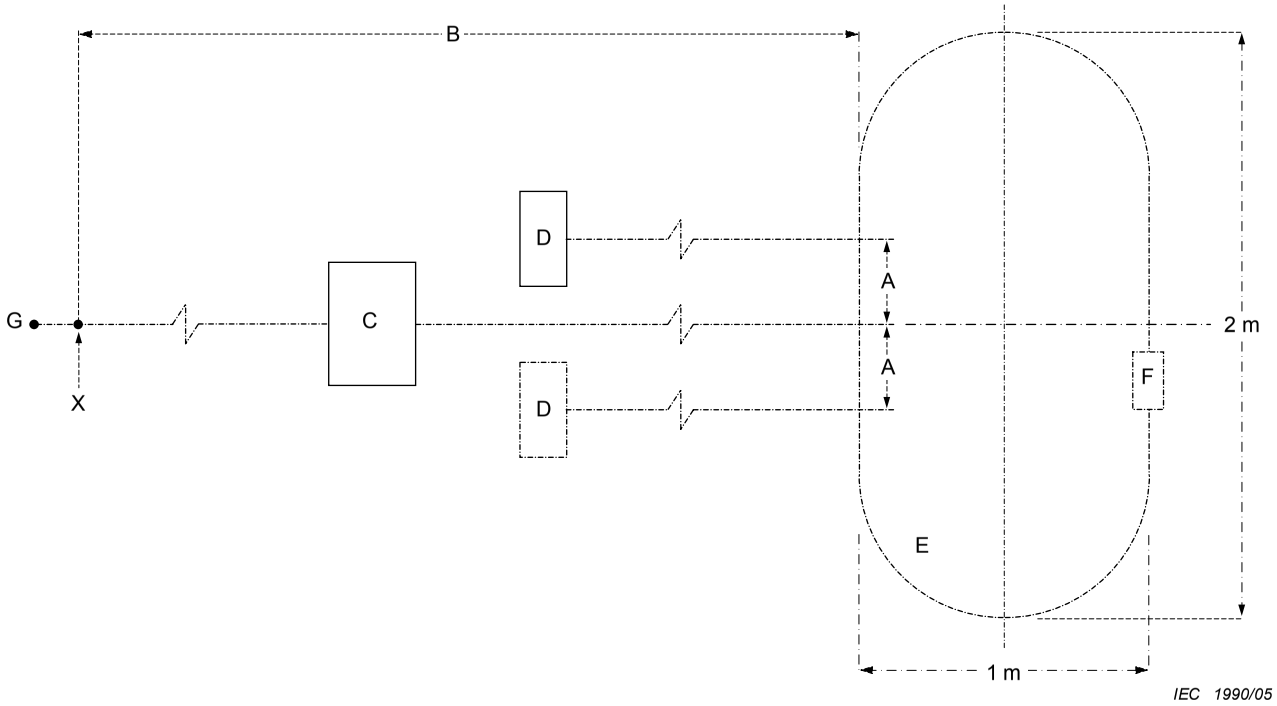

Key

A See Note 3

B See Note 1

C Transformer/Controller

D Hand controllers (if fitted), see Note 2

E Standard track layout to be used if none illustrated on sales package

F Vehicle running on track

G Mains input connector

X Terminal voltage measurement shall be made at point X

NOTE 1 For terminal voltage measurements (0,15 MHz to 30 MHz), the nearest part of the track should not be further than 1 m from point X.

NOTE 2 For power measurements (30 MHz to 300 MHz) the distance from the transformer/controller to the nearest part of the track must be extended (to 6 m) to accommodate the use of the absorbing clamp.

NOTE 3 Distance A shall be adjusted to 0,1 m where possible.

Figure 7 – Measuring arrangement for toys running on tracks

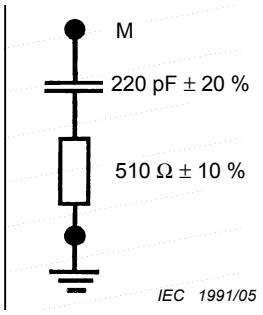

Figure 8a – RC element

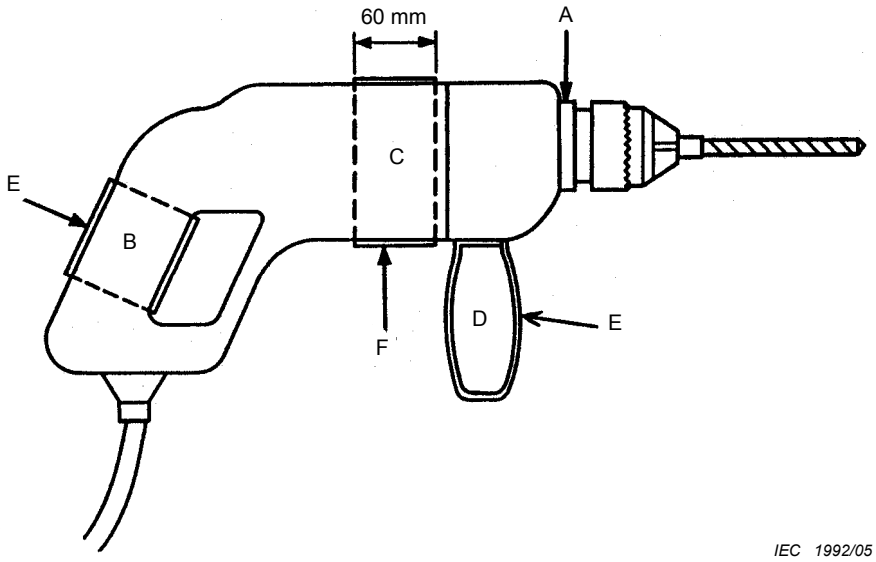

Key

A Ring or bushing

B Handle

C Body

D Second handle (if fitted)

E Metal foil wrapped round handle

F Metal foil wrapped around case in front of iron core of motor stator or gearbox

Figure 8b – Portable electric drill

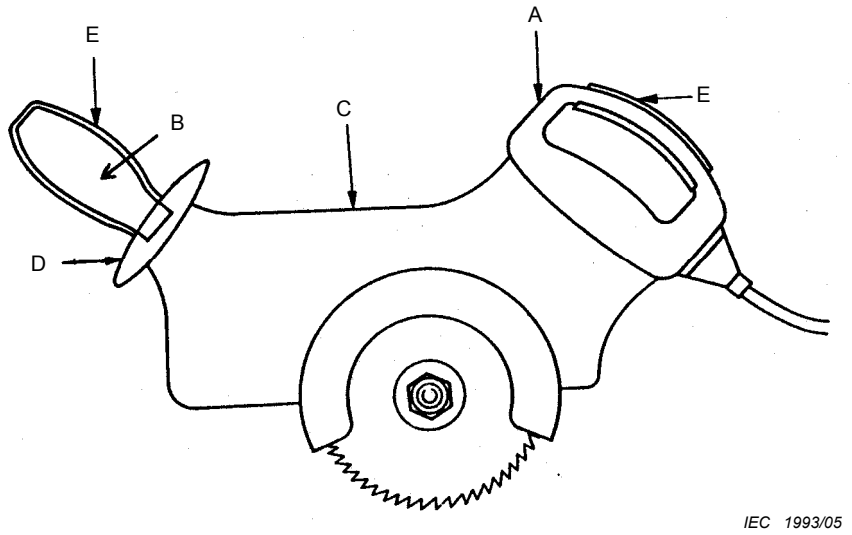

Key

A Insulated handle

B Insulated handle

C Metal body

D Guard (if fitted)

E Metal foil wrapped round handle

Figure 8c – Portable electric saw

Figure 8 – Application of the artificial hand (5.1.4 and 5.2.2.2)

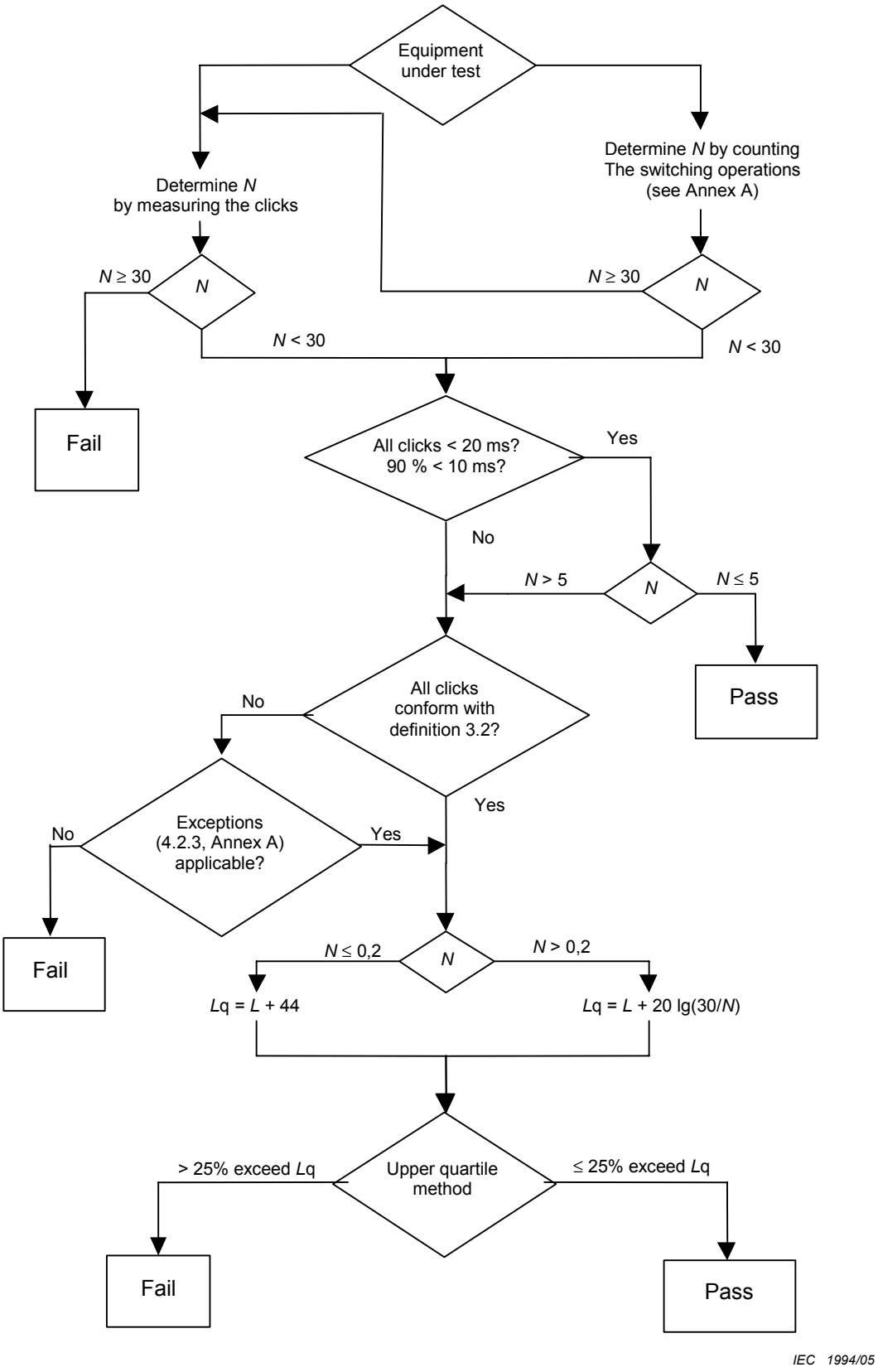

Figure 9 – Flow diagram for measurements of discontinuous disturbance (see Annex C)

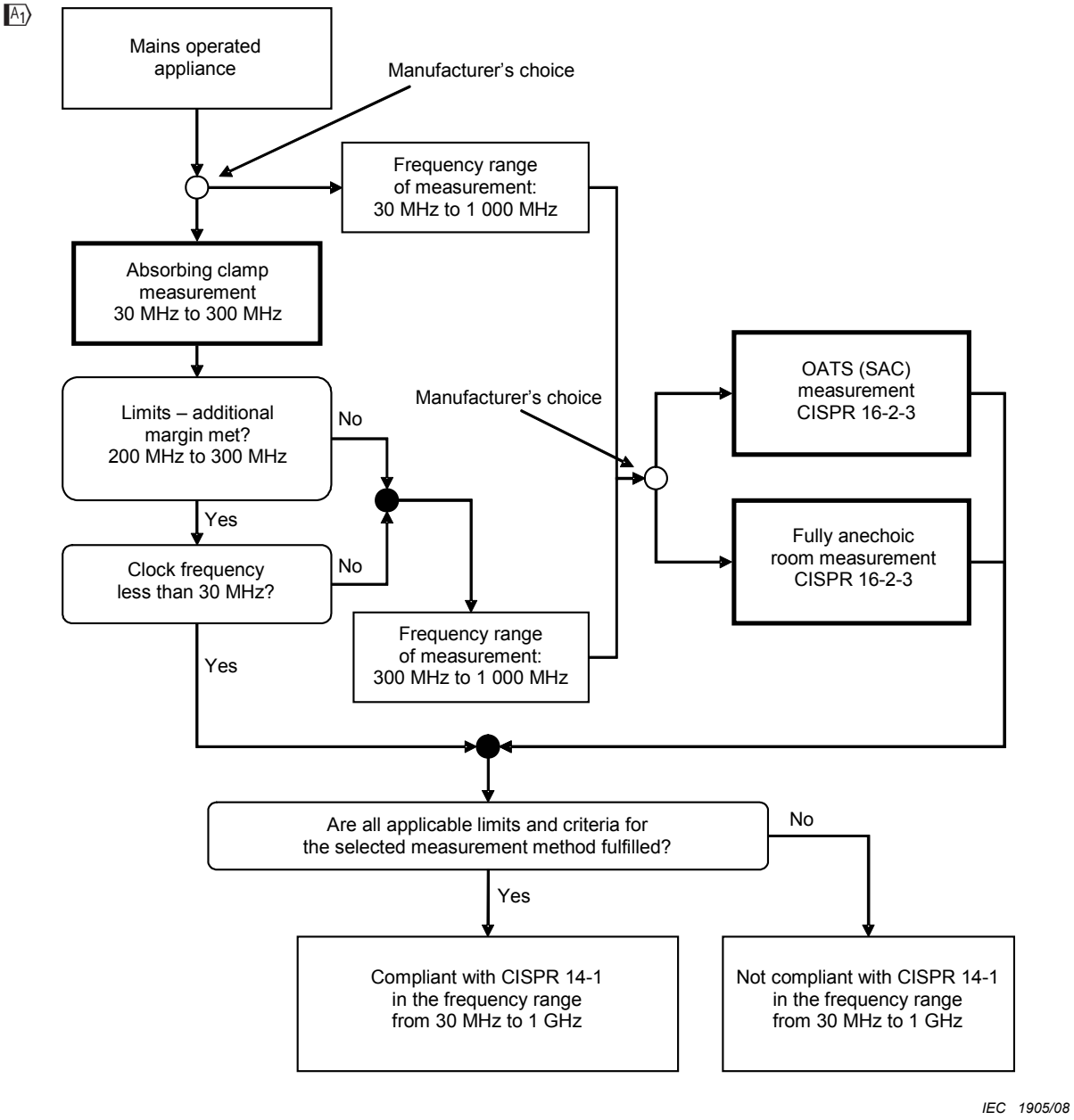

Figure 10 – Flow chart for emission testing of mains operated appliances in the frequency range from 30 MHz to 1 000 MHz

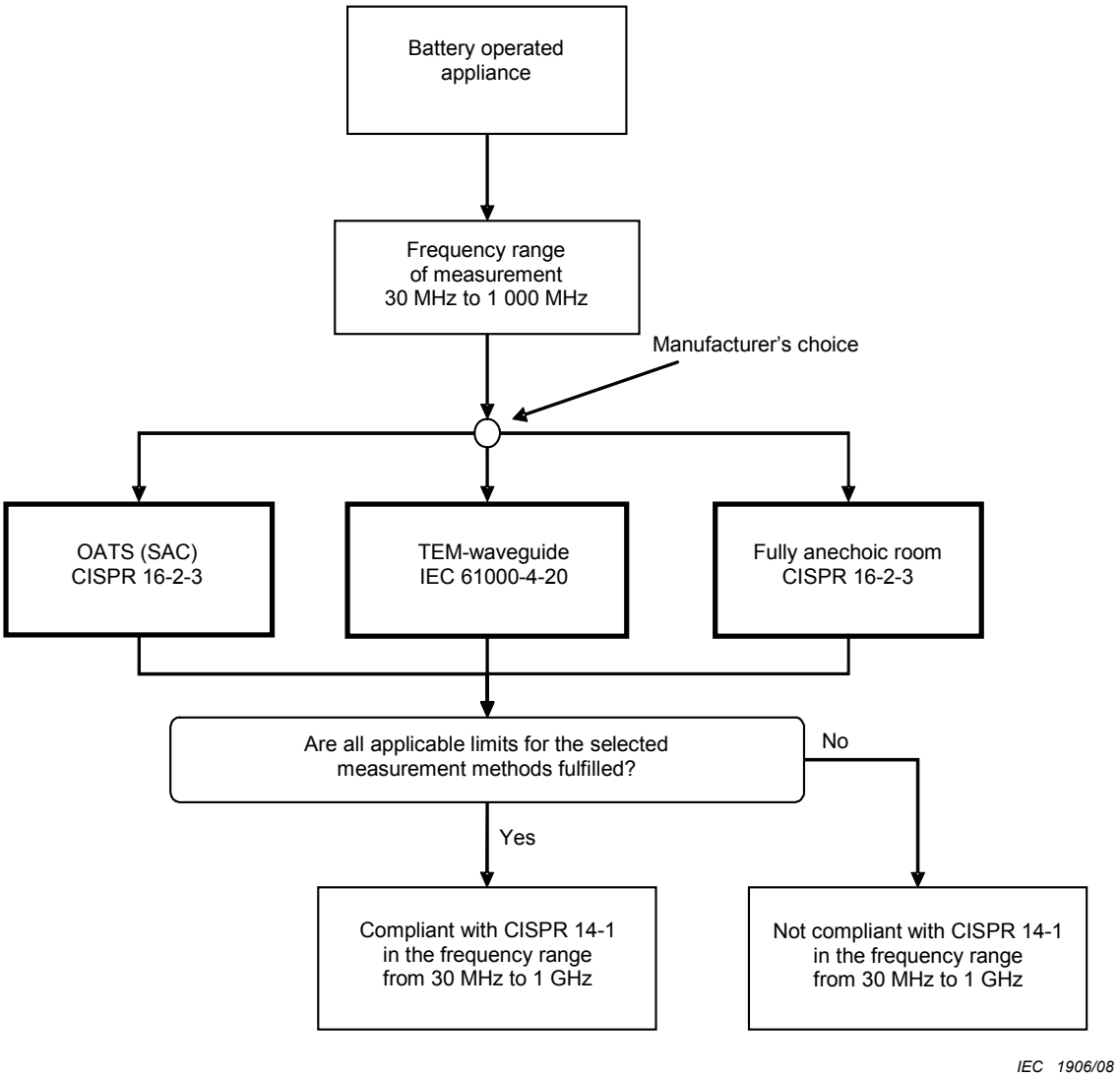

Figure 11 – Flow chart for emission testing of battery-operated appliances in the frequency range from 30 MHz to 1 000 MHz

Annex A
(normative)

Limits of disturbance caused by the switching operations of specific appliances when the formula 20 lg 30/*N* is applicable

Relaxations for classes of equipment with specific disturbance characteristics.

Thermostatically controlled three-phase switches

For thermostatically controlled three-phase switches, the three disturbances caused sequentially in each of the three phases and the neutral shall, independent of their spacing and subject to the following conditions, be evaluated as three clicks and not as continuous disturbance if:

a) the switch operates not more than once in any 15 min, period and the three disturbances are neither preceded nor followed within 2 s by any other disturbance;

b) the duration of the disturbance caused by the opening or closing of any one of the contacts shall be 20 ms or less and not more than a quarter of the number of the clicks caused by switching operations registered during the observation time is allowed to exceed the level 44 dB above the relevant limit *L* for continuous disturbance.

Table A.1 – Examples of appliances and application of limits according to 4.2.2 and 4.2.3 for which the click rate *N* is derived from the number of clicks

Type of appliance	Operating conditions subclause	Type of appliance	Operating conditions subclause
Bed warmers	7.3.4.13	Ironing presses	7.3.4.10
Blankets	7.3.4.13	Kettles	7.3.4.3
Boilers	7.3.4.3	Milk boilers	7.3.4.3
Coffee percolators	7.3.4.3	Roasters, table-type	7.3.4.2
Convectors*	7.3.4.14	Room heaters*	7.3.4.14
Cooking ovens	7.3.4.8	Steam generators	7.3.4.6
Cooking pans	7.3.4.2	Sterilizers	7.3.4.3
Deep-fat fryers	7.3.4.2	Stewing pans	7.3.4.2
Dish-washing machines	7.3.1.11	Storage water heaters, thermal and non-thermal	7.3.4.5
Electric fences	7.3.7.2	Thermostats, separate for control of room or water heaters, oil and gas burners*	7.2.4
Fan heaters*	7.3.4.14	Toasters	7.3.4.9
Feeding bottle heaters	7.3.4.3	Waffle grills	7.3.4.8
Fluid-filled heaters*	7.3.4.14	Waffle irons	7.3.4.8
Frying pans	7.3.4.2	Warming pads	7.3.4.13
Glue pots	7.3.4.3	Warming plates	7.3.4.7
Grills	7.3.4.8	Washing machines	7.3.1.10
Hair-dryers	7.3.1.8	Water heaters, instant*	7.3.4.4
Heating mattresses	7.3.4.13		
Immersion heaters	7.3.4.3		
Ironing machines, rotating	7.3.4.10		
Ironing machines, table and free standing	7.3.4.10		

In the frequency range 148,5 kHz to 30 MHz, the limits as given in table 1, column 2 – for the measurement with the quasi-peak detector on household and similar equipment – apply enlarged with

$$20 \lg \frac{30}{N} \text{ dB } (\mu\text{V}) \quad \text{for } 0{,}2 \leq N < 30$$

$$N = n_1 / T \text{ (see 7.4.2.3)}$$

* For thermostats for, or integrated in, room heating equipment intended to be used stationary, see 7.2.4 and Table A.2.

Table A.2 – Examples of appliances and application of limits for which the click rate *N* is derived from the number of switching operations and the factor *f* as mentioned in the relevant operating conditions

Type of appliance	Operating conditions subclause	Factor *f*
Thermostats for portable or removable room heating equipment*	7.2.4	1,00
Refrigerators, freezers	7.3.1.9	0,50
Cooking ranges with automatic plates	7.3.4.1	0,50
Appliances with one or more boiling plates controlled by thermostats or energy regulators	7.3.4.1	0,50
Irons	7.3.4.11	0,66
Sewing machine speed controls and starter switches	7.2.3.1	1,00
Dental drill speed control and starter switches	7.2.3.1	1,00
Electro-mechanical office machines	7.2.3.2	1,00
Slide projector picture change devices	7.2.3.3	1,00

In the frequency range 148,5 kHz to 30 MHz, the limits as given in Table 1, column 2 – for the measurement with the quasi-peak detector on household and similar equipment – apply enlarged with

$$20 \lg \frac{30}{N} \text{ dB } (\mu\text{V}) \quad \text{for } 0{,}2 \leq N < 30$$

$$N = n_2 \times f / T \text{ (see 7.4.2.3)}$$

* See 4.2.3.1.

Annex B
(informative)

Example of the use of the upper quartile method to determine compliance with disturbance limits (see 7.4.2.6)

Example: (Tumble-dryer)

The appliance has a program which stops automatically; therefore the observation time is defined and contains more than 40 clicks.

Frequency: 500 kHz

Limit for continuous disturbance level: 56 dB (µV)

First test run

Disturbance No.:										
	1	2	3	4	5	6	7	8	9	10
	*	*	*	–	*	–	*	*	–	*
	11	12	13	14	15	16	17	18	19	20
	*	*	*	*	*	*	*	*	*	*
	21	22	23	24	25	26	27	28	29	30
	*	*	*	*	*	*	*	*	*	*
* is the click	31	32	33	34	35	36	37	38	39	40
– is the discontinuous	*	–	*	*	–	*	*	*	*	*
disturbance (not	41	42	43	44	45	46	47	48	49	50
exceeding the limit	*	*	–	*	*	*	*	*	*	–
for continuous	51	52	53	54	55	56				
disturbance)	–	*	*	*	–	*				

– total time of run (T) = 35 min

– total number of clicks (n_1) = 47

$$N = \frac{47}{35} = 1{,}3$$

$$20 \lg\frac{30}{N} = 20 \lg\frac{30}{1{,}3} = 27{,}5 \text{ dB}$$

Click limit L_q for 500 kHz = 56 + 27,5 = 83,5 dB (µV)

The number of clicks allowed above the click limit L_q:

$\frac{47}{4}$ = 11,75, which means that only 11 such clicks are allowed

A second test run is made to determine how many clicks exceed the click limit L_q. The time for this second run is the same as the time taken for the first run.

Frequency: 500 kHz

Click limit L_q: 83,5 dB (µV)

Second test run

Disturbance No.:										
	1	2	3	4	5	6	7	8	9	10
	*	–	*	–	–	*	*	–	–	*
	11	12	13	14	15	16	17	18	19	20
	–	–	–	–	–	–	–	*	*	*
	21	22	23	24	25	26	27	28	29	30
	–	*	–	*	–	–	–	–	–	–
	31	32	33	34	35	36	37	38	39	40
* are the clicks above	–	–	–	–	–	*	–	*	–	–
click limit L_q	41	42	43	44	45	46	47	48	49	50
– are the clicks not	*	*	–	–	–	–	–	–	–	–
exceeding click	51	52	53	54	55	56				
limit L_q	–	–	–	–	–	–				

– total time of run (T) = 35 min (identical to first run)

– number of clicks greater than click limit L_q = 14

– allowed number of clicks = 11, therefore *the appliance is not accepted.*

Annex C
(informative)

Guidance notes for the measurement of discontinuous disturbance (clicks)

C.1 General

These guidance notes do not purport to interpret the provisions of this standard, but are intended to guide the user through the rather complex procedure, which will be explained in part C.4 in the order as shown in the flow diagram (Figure 9) with references to the clauses of this standard containing the corresponding normative determinations.

Discontinuous disturbance as described in the definition for a click (see 3.2) is presupposed to be less disturbing than continuous disturbance and therefore this standard contains a number of relaxations on the limits for this kind of disturbance.

Clicks normally are produced by switching operations and are broadband disturbances with the maximum of the spectral characteristic below 2 MHz. For this reason it is sufficient to carry out the measurements only on a restricted number of frequencies. The influence of the disturbance depends not only on the amplitude but also on the duration, the spacing and the repetition rate of the clicks. Therefore the clicks have to be evaluated not only over the frequency range but also over the time interval. Since the amplitude and the duration of a single click are not constant, the necessary reproducibility of the test results requires the application of statistical methods. For this purpose the upper quartile method is applied.

C.2 Measuring apparatus

C.2.1 Artificial mains network

The artificial mains network is required to provide a defined impedance at the terminals of the equipment under test (EUT), to isolate the test circuit from unwanted radio-frequency signals and to couple the disturbance voltage to the measuring devices (see 5.1.2).

A V-network according to CISPR 16-1-2, Clause 4 shall be used.

C.2.2 Measuring receiver

For the measurement of the amplitudes of the clicks a measuring receiver with quasi-peak detector according to CISPR 16-1-1, Clause 4 shall be used.

The i.f. output of the measuring receiver is needed for the evaluation of duration and spacing of the clicks.

C.2.3 Disturbance analyzer

The recommended method for the assessment of discontinuous disturbance is the use of a special disturbance analyzer according to CISPR 16-1-1, Clause 10. Usually a quasi-peak measuring receiver is already integrated in the disturbance analyzer.

It should be considered that not all exceptions given in CISPR 14-1 are included in CISPR 16-1-1. Therefore the disturbance analyzer may not be able to supervise the applicability of all exceptions. In this case in addition a storage oscilloscope shall be used, if the existence of configurations of discontinuous disturbance is observed which are not in line with the definition of a click (3.2).

C.2.4 Oscilloscope

The use of an oscilloscope may be necessary for the duration measurements. Clicks are transient events, therefore a storage oscilloscope is required.

The cut-off frequency of the oscilloscope shall be not lower than the intermediate frequency of the measuring receiver.

C.3 Measurement of the basic parameters of a discontinuous disturbance

C.3.1 Amplitude

The amplitude of the discontinuous disturbance is the quasi-peak reading of the measuring receiver or the disturbance analyzer as specified in C.2.

In case of close succession bursts of discontinuous disturbances the indication on the output of the quasi-peak detector may exceed the limit for continuous disturbance during the whole time interval. For this time interval all registered disturbances have to be taken into account, which exceed the i.f. reference level (see 3.3).

C.3.2 Duration and spacing

The duration and spacing of the disturbance is measured on the i.f. output either manually with a storage oscilloscope or automatically with a disturbance analyzer.

For a manual measurement the triggering of the oscilloscope shall be adjusted to the i.f. reference level of the measuring receiver, that means to the corresponding value on the i.f. output of the measuring receiver of an unmodulated sinusoidal input signal which produces a quasi-peak indication equal to the limit for continuous disturbance (see 3.3).

NOTE Other calibration sources may be used (for instance 100 Hz pulses). Using pulsed calibration sources the weighting factor given in CISPR 16-1-1, pulse response curve for band B, shall be taken into account. Furthermore, regarding impulse area and spectrum, the pulses shall conform with the requirements of Annex B in CISPR 16-1-1.

During the manual measurement with a storage oscilloscope it shall be considered that the indication of a single pulse after the weighting by the quasi-peak detector is more than 20 dB lower than the indication of a sinusoidal signal or 100 Hz pulses with the same amplitude. Not all registered disturbances on the oscilloscope, which is adjusted to the i.f. reference level, shall be taken into account but only those which exceed the limit for continuous disturbance. Therefore the indication of the quasi-peak detector or the display of the disturbance analyzer shall be observed simultaneously. It shall be noted that after a single pulse the maximum of the quasi-peak indication occurs approximately 400 ms later.

NOTE Duration and spacing of the clicks can be measured also on the output of the envelope detector. Duration measurements after the quasi-peak detector are impossible due to the defined discharge time of 160 ms in this detector.

Figure 3 and 4 show examples of different kinds of discontinuous disturbances.

Special precautions have to be taken when discontinuous disturbance has to be measured in the presence of continuous disturbance. In such circumstances it may be necessary to adjust the triggering of the oscilloscope not to the i.f. reference level but to an appropriate higher level for the purpose of excluding the influence of the continuous disturbance.

Care shall be taken to use the correct writing speed, otherwise the peaks of the pulses may not be completely displayed.

The following time bases are recommended to be used for duration measurements with an oscilloscope:

– for disturbances with duration shorter than 10 ms:
  time base 1 ms/cm to 5 ms/cm;
– for disturbances with duration between 10 ms and 200 ms:
  time base 20 ms/cm to 100 ms/cm
– for disturbances at intervals of about 200 ms:
  time base 100 ms/cm

NOTE Such time bases make possible visual evaluation to an accuracy of approximately 5 %, which aligns with the 5 % accuracy specified for the disturbance analyzer in CISPR 16-1-1, Clause 10.

Duration measurements may also be performed on the mains supply current circuit of the EUT by connecting the oscilloscope to the artificial mains V-network, provided rise and fall-off time of the registered disturbances are very short in comparison with the duration of the disturbance. (The edges of the registered pulses on the oscilloscope are very steep.)

In case of doubt the duration measurements have to be executed on the i.f. output of a measuring receiver as specified in C.2.2.

NOTE Owing to the limited bandwidth of the measuring receiver the shape and possibly the duration of the discontinuous disturbances may be changed. It is therefore recommended that the simple oscilloscope / artificial mains V-network combination be used only when the exception 4.2.3.3 "instantaneous switching" applies, that means when the amplitude of the clicks have not to be measured. In all other cases the use of a measuring receiver is recommended.

C.4 Measuring procedure of discontinuous disturbances, following the flow diagram (Figure 9)

C.4.1 Determination of the click rate

The click rate is the average number of clicks per minute (see 3.6). Dependent on the type of the EUT there are two methods for determining the click rate:

- by measuring the number of clicks or
- by counting the number of switching operations.

Generally it is allowed for each EUT to determine the click rate by measuring the clicks, that means it is allowed to take each EUT as a "black box" (for thermostats special methods apply, see 7.2.4). For both methods the minimum observation time shall be observed (see 3.5 and 7.4.2.1).

The measurements of the number of clicks for determining the click rate shall be carried out only on two frequencies: 150 kHz and 500 kHz (see 7.4.2.1).

The appliance shall be operated under the conditions as given in Clause 7.2 or 7.3. For some kinds of appliances these subclauses contain additional rules for determining the click rate.

When not specified, the EUT shall be operated under the most onerous conditions of typical use, that means under the conditions with the highest click rate (see 7.4.2.2). It shall be taken into account that the click rate on different mains terminals (e.g. phase or neutral) may be different.

The input attenuator of the measuring receiver shall be adjusted to the limit L of continuous disturbance.

The click rate is determined from the formula: $N = n_1 / T$,

where n_1 is the number of measured clicks during the minimum observation time T in minutes (see 7.4.2.3).

With a click rate $N \geq 30$ the limits for continuous disturbance apply (see 4.2.2.1). Since the measurements already showed that there are discontinuous disturbances exceeding these limits (see the definition of a click in 3.2), it is clear that the EUT failed the test.

For certain appliances, mentioned in Annex A, Table A.2, the click rate can be determined by counting the number of switching operations.

In this case the click rate can be obtained from the formula: $N = n_2 \times f / T$,

where n_2 is the number of the counted switching operations during the minimum observation time T in minutes and f is a factor given in Annex A, Table A.2 (see 7.4.2.3).

If the click rate, obtained by counting the switching operations, is higher or equal than 30 the EUT has not failed the test yet, but there still remains the possibility of determining the click rate by measuring the clicks, that means the possibility to measure how many of the counted switching operations in fact are causing disturbances with amplitudes higher than the limit for continuous disturbance.

C.4.2 Application of the exceptions

After determining the click rate it is recommended to prove the applicability of the exception rule 4.2.3.3 instantaneous switching. If the therein given conditions apply (duration of all clicks <20 ms, 90 % of them with a duration <10 ms, click rate $N < 5$), the procedure can be stopped. A measurement of the amplitudes of the clicks in this case is not necessary, the EUT passed the test.

Furthermore it shall be investigated whether duration and spacing of all discontinuous disturbances show conformity with the definition of a click (see 3.2), because only in this case the relaxed limits for discontinuous disturbance can be used.

If configurations of discontinuous disturbances are observed that do not correspond to the definition of a click (see 3.2), the applicability of the other exceptions, mentioned in 4.2.3 or in Annex A, shall be checked.

For example, if the separation between two disturbances is less than 200 ms and the click rate is less than 5 often the exception 4.2.3.4 applies. A disturbance analyzer, which is not able to supervise all exceptions, in this case automatically indicates the existence of continuous disturbance, that means the result "fail".

If none of the exceptions apply to the observed configurations of discontinuous disturbance which do not conform with the definition of a click (see 3.2), the EUT failed the test.

C.4.3 Upper quartile method

If the measurements of the click rate, duration and spacing of the clicks established that the relaxed limits for discontinuous disturbance can be applied, the amplitude of the clicks shall be evaluated by using the upper quartile method (see 3.8 and 7.4.2.6)

Corresponding to the click rate N shall be calculated the amount ΔL by which the limits L for continuous disturbance shall be increased (see 4.2.2.2):

ΔL = 44 dB for $N < 0{,}2$

$\Delta L = [20 \log(30/N)]$ dB for $0{,}2 \leq N < 30$

The click limit L_q is determined from the formula:

$$L_q = L + \Delta L$$

The amplitude of the clicks shall be evaluated only at the following restricted number of frequencies: 150 kHz; 500 kHz; 1,4 MHz and 30 MHz (see 7.4.2.5).

The input attenuator of the measuring receiver shall be adjusted to the relaxed limit L_q for discontinuous disturbance.

These measurements shall be performed under the same operating conditions and with the same observation time as has been chosen when determining the click rate (see 7.4.2.5).

The appliance under test is deemed to comply with the limits for discontinuous disturbance if not more than a quarter of the number of clicks registered during the observation time T exceeds the click limit L_q (see 7.4.2.6). That means the number n of clicks exceeding L_q has to be compared with the number n_1 or n_2, obtained during the determination of the click rate (see C.4.1 and 7.4.2.3). The requirements of this standard are fulfilled when the following conditions apply:

$$n \leq n_1 \times 0{,}25 \quad \text{or} \quad n \leq n_2 \times 0{,}25$$

Annex B gives an example of the use of the upper quartile method.

Bibliography

IEC 61000-3-8, *Electromagnetic Compatibility (EMC) – Part 3: Limits – Section 8: Signalling on low voltage electrical installations – Emission levels, frequency bands and electromagnetic disturbance levels*

IEC 61140, *Protection against electric shock – Common aspects for installation and equipment*

IEC 61558-2-7, *Safety of power transformers, power supply units and similar – Part 2: Particular requirements for transformers for toys*

CISPR 11, *Industrial, scientific and medical (ISM) radio-frequency equipment – Electromagnetic disturbance characteristics – Limits and methods of measurement*

CISPR 12, *Vehicles, boats and internal combustion engine-driven devices – Radio disturbance characteristics – Limits and methods of measurement for the protection of receivers except those installed in the vehicle/boat/device itself or in adjacent vehicles/ boats/devices*

CISPR 13, *Sound and television broadcast receivers and associated equipment – Radio disturbance characteristics – Limits and methods of measurement*

CISPR 16-4-3, *Specification for radio disturbance and immunity measuring apparatus and methods – Part 4-3: Uncertainties, statistics and limit modelling – Statistical considerations in the determination of EMC compliance of mass-produced products*

CISPR 20, *Sound and television broadcast receivers and associated equipment – Immunity characteristics – Limits and methods of measurement*

Annex ZA
(normative)

Normative references to international publications with their corresponding European publications

The following referenced documents are indispensable for the application of this document. For dated references, only the edition cited applies. For undated references, the latest edition of the referenced document (including any amendments) applies.

NOTE When an international publication has been modified by common modifications, indicated by (mod), the relevant EN/HD applies.

Publication	Year	Title	EN/HD	Year
IEC 60050-161 + A1 + A2	1990 1997 1998	International Electrotechnical Vocabulary (IEV) Chapter 161: Electromagnetic compatibility	- - -	- - -
IEC 60335-2-76 (mod)	2002	Household and similar electrical appliances - Safety Part 2-76: Particular requirements for electric fence energizers	EN 60335-2-76	2005
IEC 60598-2-4	1997	Luminaires Part 2: Particular requirements - Section 4: Portable general purpose luminaires	EN 60598-2-4	1997
IEC 60598-2-10	2003	Luminaires Part 2-10: Particular requirements - Portable luminaires for children	EN 60598-2-10 + corr. August	2003 2005
CISPR 15	2000	Limits and methods of measurement of radio disturbance characteristics of electrical lighting and similar equipment	EN 55015[1)]	2000
CISPR 16-1-1	2003	Specification for radio disturbance and immunity measuring apparatus and methods Part 1-1: Radio disturbance and immunity measuring apparatus - Measuring apparatus	EN 55016-1-1	2004
CISPR 16-1-2	2003	Specification for radio disturbance and immunity measuring apparatus and methods Part 1-2: Radio disturbance and immunity measuring apparatus - Ancillary equipment - Conducted disturbances	EN 55016-1-2	2004
CISPR 16-1-3	2004	Specification for radio disturbance and immunity measuring apparatus and methods Part 1-3: Radio disturbance and immunity measuring apparatus - Ancillary equipment - Disturbance power	EN 55016-1-3	2006
CISPR 16-2-1	2003	Specification for radio disturbance and immunity measuring apparatus and methods Part 2-1: Methods of measurement of disturbances and immunity - Conducted disturbance measurements	EN 55016-2-1	2004

[1)] EN 55015 is superseded by EN 55015:2006, which is based on CISPR 15:2005.

Publication	Year	Title	EN/HD	Year
CISPR 16-2-2	2003	Specification for radio disturbance and immunity measuring apparatus and methods Part 2-2: Methods of measurement of disturbances and immunity - Measurement of disturbance power	EN 55016-2-2	2004
CISPR 22 (mod)	2005	Information technology equipment - Radio disturbance characteristics - Limits and methods of measurement	EN 55022	2006
IEC 61000-4-20	2003	Electromagnetic compatibility (EMC) - Part 4-20: Testing and measurement techniques - Emission and immunity testing in transverse electromagnetic (TEM) waveguides	EN 61000-4-20	2003
CISPR 16-1-4 A1	2007 2007	Specification for radio disturbance and immunity measuring apparatus and methods - Part 1-4: Radio disturbance and immunity measuring apparatus - Ancillary equipment - Radiated disturbances	EN 55016-1-4 A1	2007 2008
CISPR 16-2-3	2006	Specification for radio disturbance and immunity measuring apparatus and methods - Part 2-3: Methods of measurement of disturbances and immunity - Radiated disturbance measurements	EN 55016-2-3	2006
CISPR 16-4-2	2003	Specification for radio disturbance and immunity measuring apparatus and methods - Part 4-2: Uncertainties, statistics and limit modelling - Uncertainty in EMC measurements	EN 55016-4-2	2004

Annex ZZ
(informative)

Coverage of Essential Requirements of EC Directives

This European Standard has been prepared under a mandate given to CENELEC by the European Commission and the European Free Trade Association and within its scope the standard covers essential requirements as given in Article 4(a) of EC Directive 89/336/EEC and Annex I Article 1(a) of EC Directive 2004/108/EC.

Compliance with this standard provides one means of conformity with the specified essential requirements of the Directives concerned.

WARNING: Other requirements and other EC Directives may be applicable to the products falling within the scope of this standard.

This page deliberately set blank

BS EN 55014-1:2006 +A1:2009

BSI - British Standards Institution

BSI is the independent national body responsible for preparing British Standards. It presents the UK view on standards in Europe and at the international level. It is incorporated by Royal Charter.

Revisions

British Standards are updated by amendment or revision. Users of British Standards should make sure that they possess the latest amendments or editions.

It is the constant aim of BSI to improve the quality of our products and services. We would be grateful if anyone finding an inaccuracy or ambiguity while using this British Standard would inform the Secretary of the technical committee responsible, the identity of which can be found on the inside front cover. Tel: +44 (0)20 8996 9000. Fax: +44 (0)20 8996 7400.

BSI offers members an individual updating service called PLUS which ensures that subscribers automatically receive the latest editions of standards.

Buying standards

Orders for all BSI, international and foreign standards publications should be addressed to Customer Services. Tel: +44 (0)20 8996 9001. Fax: +44 (0)20 8996 7001 Email: orders@bsigroup.com You may also buy directly using a debit/credit card from the BSI Shop on the Website http://www.bsigroup.com/shop

In response to orders for international standards, it is BSI policy to supply the BSI implementation of those that have been published as British Standards, unless otherwise requested.

Information on standards

BSI provides a wide range of information on national, European and international standards through its Library and its Technical Help to Exporters Service. Various BSI electronic information services are also available which give details on all its products and services. Contact Information Centre. Tel: +44 (0)20 8996 7111 Fax: +44 (0)20 8996 7048 Email: info@bsigroup.com

Subscribing members of BSI are kept up to date with standards developments and receive substantial discounts on the purchase price of standards. For details of these and other benefits contact Membership Administration. Tel: +44 (0)20 8996 7002 Fax: +44 (0)20 8996 7001 Email: membership@bsigroup.com

Information regarding online access to British Standards via British Standards Online can be found at http://www.bsigroup.com/BSOL

Further information about BSI is available on the BSI website at http://www.bsigroup.com

BSI Group
Headquarters 389
Chiswick High Road,
London, W4 4AL, UK
Tel +44 (0)20 8996 9001
Fax +44 (0)20 8996 7001
www.bsigroup.com/
standards